User Manual
SONO-VARIO

SONO-VARIOStandard for general fine Bulk Goods like Sand

SONO-VARIOXtreme for very high abrasive Goods like Gravel and Grit

SONO-VARIOLD for low Density Materials like Grain and Woodchips

IMKO Micromodultechnik GmbH
Im Stöck 2
D - 76275 Ettlingen

Telefon: +49 - (0)7243 - 5921 - 0
Fax: +49 - (0)7243 - 90856
e-mail: info@imko.de
http: //www.imko.de

User Manual for SONO-VARIO

As of 26. June 2013

Thank you for buying an IMKO moisture probe.
Please carefully read these instructions in order to achieve best possible results with your SONO-VARIO probe for the in-line moisture measurement. Should you have any questions or suggestions regarding your new probe after reading, please do not hesitate to contact our authorised dealers or IMKO directly. We will gladly help you.

List of Content:

1. Instrument Description SONO-VARIO 4

1.1.1. The patented TRIME® TDR-Measuring Method 4

1.1.2. TRIME® compared to other Measuring Methods 4

1.1.3. Areas of Application with SONO-VARIOStandard, SONO-VARIOXtrem and SONO-$VARIO_{LD}$4

1.2. Mode of Operation 5

1.2.1. Measurement value collection with pre-check, average value and filtering 5

1.2.2. Determination of the mineral Concentration 5

1.2.3. Temperature Measurement 5

1.2.4. Temperature compensation when working at high temperatures 5

1.2.5. Analogue Outputs 6

1.2.6. The serial RS485 interface 7

1.2.7. Error Reports and Error Messages 7

1.3. Configuration of the Measure Mode 8

1.4. Operation Mode CA and CF at non-continuous Material Flow 8

1.4.1. *Average Time* in the measurement mode CA and CF 10

1.4.2. Filtering at material gaps in mode CA and CF 10

1.4.3. Mode CC – automatic summation of a moisture quantity during one batch process. 11

1.4.4. Mode CH – Automatic Moisture Measurement in one Batch 13

1.5. Calibration Curves 13

1.5.1. SONO-VARIO for measuring Moisture of Sand and Aggregates 16

1.5.2. SONO-VARIO for measuring Moisture of Expanded Clay and Lightly Sand 17

1.6. Creating a linear Calibration Curve for a specific Material 18

1.6.1. Nonlinear calibration curves 19

1.7. Connectivity to SONO Probes 20

1.7.1. Connection Plug and Plug Pinning 21

1.7.2. Analogue Output 0..10V with a Shunt-Resistor 22

1.8. Connection of the RS485 to the SM-USB Module from IMKO 23

2. Quick Guide for the Software SONO-CONFIG 25
2.1.1. Scan of connected SONO probes on the RS485 interface 25
2.1.2. Configuration of Measure Mode 26
2.1.3. Analogue outputs of the SONO probe 26
2.1.4. Selection of the individual Calibration Curves 27
2.1.5. Test run in the respective Measurement Mode 29
2.1.6. Basic Balancing in Air and Water 30
3. Installation of the Probe 31
3.1. Further Assembly Instructions 32
3.2. Assembly Dimensions 33
3.3. Mounting in curved Surfaces 35
3.4. Funnel shape for higher material depth 35
3.5. Gas- and waterproofed Installation 36
3.6. Installation in a conveyor pipeline 37
3.7. Exchange of the Probe Head of the VARIOXtrem/LD 38
3.7.1. Basic Balancing of a new Probe Head 39
4. Technical Data SONO-VARIO 40

1. Instrument Description SONO-VARIO

1.1.1. The patented TRIME® TDR-Measuring Method

The TDR technology (**T**ime-**D**omain-**R**eflectometry) is a radar-based dielectric measuring procedure at which the transit times of electromagnetic pulses for the measurement of dielectric constants, respectively the moisture content are determined.

SONO-VARIO consists of a high grade steel casing with a wear-resistant sensor head with ceramic window. An integrated TRIME TDR measuring transducer is installed into the casing. A high frequency TDR pulse (1GHz), passes along wave guides and generates an electro-magnetic field around these guides and herewith also in the material surrounding the probe. Using a new patented measuring method, IMKO has achieved to measure the transit time of this pulse with a resolution of 1 picosecond ($1x10^{-12}$), consequently determine the moisture and the conductivity of the measured material.

The established moisture content, as well as the conductivity, respectively the temperature, can either be uploaded directly into a SPC via two analogue outputs 0(4) ...20 mA or recalled via a serial RS485 interface.

1.1.2. TRIME® compared to other Measuring Methods

In contrary to conventional capacitive or microwave measuring methods, the TRIME® technology (**T**ime-Domain-**R**eflectometry with **I**ntelligent **M**icromodule **E**lements) does not only enable the measuring of the moisture but also to verify if the mineral concentration specified in a recipe has been complied with. This means more reliability at the production.

TRIME-TDR technology operates in the ideal frequency range between 600MHz and 1,2 GHz. Capacitive measuring methods (also referred to as Frequency-Domain-Technology) , depending on the device, operate within a frequency range between 5MHz and 40MHz and are therefore prone to interference due to disturbance such as the temperature and the mineral contents of the measured material. Microwave measuring systems operate with high frequencies >2GHz. At these frequencies, nonlinearities are generated which require very complex compensation. For this reason, microwave measuring methods are more sensitive in regard to temperature variation.

SONO probes calibrate themselves in the event of abrasion due to a novel and innovative probe design. This consequently means longer maintenance intervals and, at the same time, more precise measurement values.

The modular TRIME technology enables a manifold of special applications without much effort due to the fact that it can be variably adjusted to many applications.

1.1.3. Areas of Application with SONO-VARIO$_{Standard}$, SONO-VARIO$_{Xtrem}$ and SONO-VARIO$_{LD}$

SONO-VARIO is suited for moisture measurement of different materials. An installation is possible into containers, hoppers, above conveyor belts, or in silos.

- The **SONO-VARIO$_{Standard}$** is suited for measuring of normal abrasive materials like sand and gravel up to 4mm. The probe head consists of stainless steel with a rectangular ceramic window.
- The **SONO-VARIO$_{Xtrem}$** is suited for measuring of very high abrasive materials like gravel 4/32 and grit. The probe head consists of hardened steel with a rectangular special ceramic window.
- The **SONO-VARIO$_{LD}$** (Low Density) is suited for moisture measurement of materials with low density like corn, wood chips and other materials. For wood chips and other very loose materials which show a bad flowability, an installation inside a screw conveyor is recommended due to homogenuous densities inside a screw conveyor.

1.2. Mode of Operation

1.2.1. Measurement value collection with pre-check, average value and filtering

SONO probes measure internally at very high cycle rates of 10 kHz and update the measurement value at a cycle time of 250 milliseconds at the analogue output. In these 250 milliseconds a probe-internal pre-check of the moisture values is already carried out, i.e. only plausible and physically checked and pre-averaged single measurement values are be used for the further data processing. This increases the reliability for the recording of the measured values to a downstream control system significantly.
In the **Measurement Mode CS** (Cyclic-Successive), an average value is not accumulated and the cycle time here is 200 milliseconds. In the **Measurement Mode CA, CF, CC and CK**, not the momentarily measured individual values are directly issued, but an average value is accumulated via a variable number of measurements in order to filter out temporary variations. These variations can be caused by inhomogeneous moisture distribution in the material surrounding the sensor head. The delivery scope of SONO-VARIO includes suited parameters for the averaging period and a universally applicable filter function deployable for currently usual applications. The time for the average value accumulation, as well as various filter functions, can be adjusted for special applications.

1.2.2. Determination of the mineral Concentration

With the radar-based TRIME measurement method, it is now possible for the first time, not only to measure the moisture, but also to provide information regarding the conductivity, respectively the mineral concentration or the composition of a special material. Hereby, the attenuation of the radar pulse in the measured volume fraction of the material is determined. This novel and innovative measurement delivers a radar-based conductance value (RbC – **R**adar-**b**ased-**C**onductivity) in dS/m as characteristic value which is determined in dependency of the mineral concentration and is issued as an unscaled value. The RbC-measurement range of the SONO-VARIO is 0..12dS/m

1.2.3. Temperature Measurement

A temperature sensor is installed into the SONO-VARIO which establishes the casing temperature 3mm beneath the sensor surface. The temperature can optionally be issued at the analogue output 2. As the TRIME electronics operates with a power of approximately 1.5 W, the probe casing does slightly heat up. A measurement of the material temperature is therefore only possible to a certain degree. The material temperature can be determined after an external calibration and compensation of the sensor self-heating.

1.2.4. Temperature compensation when working at high temperatures

Despite SONO probes show a generally low temperature drift, it could be necessary to compensate a temperature drift in special applications. SONO probes offer two possibilities for temperature compensation.
A) Temperature compensation of the internal SONO-electronic
With this method of temperature compensation, a possible temperature drift of the SONO-electronic can be compensated. Because the SONO-electronic shows a generally low temperature drift, SONO probes are presetted at delivery for standard ambient conditions with the parameter **TempComp**=0.2. Dependent on SONO probe type, this parameter TempComp can be adjusted for higher temperature ranges (up to 100°C) to values up to **TempComp**=0.75. But it is to consider that it is necessary to make a Basic-Balancing of the SONO probe in air and water, if the parameter TempComp is changed to another value as TempComp=0.2. The parameter TempComp can be changed with the software tool SONO-CONFIG, in the menu **"Calibration**" and the window "**TemperatureCompensation**".

B) Temperature compensation for the measured material

Water and special materials like oil fruits and others, can show a dependency of the dielectric permittivity when using SONO probes at high temperature ranges. The dielectric permittivity is the raw parameter for measuring water content with SONO probes. If special materials show a very special temperature drift, e.g. in lower temperatures a higher drift than in higher temperatures, than it could be necessary to make a more elaborate temperature compensation. Therefore it is necessary to measure in parallel the material temperature with the temperature sensor which is placed inside the SONO probe. Normally this is related with high efforts in laboratory works. SONO probes offer the possibility to set special temperature compensation parameters t0 to t5 for every calibration curve Cal1 of Cal15 (see chapter "Selection of the individual calibration curve"). Please contact IMKO should you need any assistance in this area.

1.2.5. Analogue Outputs

The measurement values are issued as a current signal via the analogue output. With the help of the service program **SONO-CONFIG,** the SONO-VARIO can be set to the two versions for 0..20mA or 4..20mA. Furthermore, it is also possible to variably adjust the moisture dynamic range e.g. to 0-10%, **0-20%** or 0-30%. For a 0-10V DC voltage output, a 500R resistor can be installed in order to reach a 0..10V output.

Analogue Output 1: Moisture in % (0…20%, variable adjustable)
Analogue Output 2: Conductivity (RbC) or optionally the temperature.
In addition, there is also the option to split the analogue output 2 into two ranges: into 4..11mA for the temperature and 12..20mA for the conductivity. The analogue output 2 hereby changes over into an adjustable one-second cycle between these two (current) measurement windows.

For the analogue outputs 1 and 2 there are thus two adjustable options:
<u>Analog Output:</u> (two possible selections)

0..20mA **4..20mA**

<u>Output Channel 1 and 2</u>: (three possible selections)

1. **Moist, Temp.** Analogue output 1 for moisture, output 2 for temperature.
   or
2. **Moist, Conductivity** Analogue output 1 for moisture, output 2 for conductivity in a range of 0..20dS/m.
   or
3. **Moist, Temp/Conductivity** Analogue output 1 for moisture, output 2 for both, temperature and conductivity with an automatic current-window change.

<u>For analogue output 1 and 2 the moisture dynamic range and temperature dynamic range can be variably adjusted. The moisture dynamic range should not exceed 100%</u>

Moisture Range:
Maximum: e.g. 20 for sand (Set in %)
Minimum: 0

Temp. Range:
Maximum: 100 °C
Minimum: 0 °C

1.2.6. The serial RS485 interface

SONO-VARIO is equipped with a standard RS485 interface to serially readout individual parameters or measurement values. An easy to implement data transfer protocol enables the connection of several sensors/probes at the RS485-Interface. In addition, the SONO-VARIO can be directly connected to the USB port of a PC, in order to adjust individual measuring parameters or conduct calibrations, via the RS485 USB Module which can be provided by IMKO.

1.2.7. Error Reports and Error Messages

SONO-VARIO is very fault-tolerant. This enables failure-free operation. Error messages can be recalled via the serial RS485 interface.

1.3. Configuration of the Measure Mode

The configuration of SONO-VARIO is preset in the factory before delivery. A process-related later optimisation of this device-internal setting is possible with the help of the service program **SONO-CONFIG**. For all activities regarding parameter setting and calibration the probe can be directly connected via the RS485 interface to the PC via a RS485 USB-Module which is available from IMKO.

The following settings of SONO-VARIO can be amended with the service program **SONO-CONFIG**:

Measurement-Mode and Parameters:

- Measurement Mode A-On-Request (only in network operation for the retrieval of measurement values via the RS485 interface).
- Measurement Mode C Cyclic:
  SONO-VARIO is supplied ex factory with suited parameters in **Mode CA** with 1 second average time for bulk goods.

  Mode CS: (Cyclic-Successive) For very short measuring processes (e.g. 5…20 seconds) without floating average, with internal up to 100 measurements per second and a cycle time of 250 milliseconds at the analogue output. Measurement mode CS can also be used for getting raw data from the SONO-probe without averaging and filtering.
  Mode CA: (Cyclic-Average-Filter) For relative short measuring processes with continual average value, filtering and an accuracy of up to 0.1%
  Mode CF: (Cyclic-Float-Average) for continual average value with filtering and an accuracy of up to 0.1% for very slowly measuring processes, e.g. in fluidized bed dryers, conveyor belts, etc.
  Mode CK: (Cyclic-Kalman-Filter) Standard setting for SONO-MIX for use in fresh concrete mixer with continual average value with special dynamic Kalman filtering and an accuracy of up to 0.1%.
  Mode CC: (Cyclic Cumulated) with automatic summation of a moisture quantity during one batch process.
  Mode CH: (Cyclic Hold) similar to mode CC but without summation.

- Calibration (if completely different materials are deployed)

Each of these settings will be preserved after shut down of the probe and is therefore stored on a permanent basis.

1.4. Operation Mode CA and CF at non-continuous Material Flow

For mode CA and CF the SONO probes are supplied ex factory with suited parameters for the averaging time and with a universally deployable filter function suited for most currently applications.

The setting options and special functions of SONO probes depicted in this chapter are only rarely required. It is necessary to take into consideration that the modification of the settings or the realisation of these special functions may lead to faulty operation of the probe!

For applications with non-continuous material flow, there is the option to optimise the control of the measurement process via the adjustable filter values *Filter-Lower-Limit, Filter-Upper-Limit* and the time constant *No-Material-Keep-Time*. The continual/floating averaging can be set with the parameter *Average-Time*.

Parameters in the Measurement Mode CA, CF and CK	***Function***
Average-Time Standard Setting: **10** *Setting Range: 1…20*	The time (in seconds) for the generation of the average value can be set with this parameter.
Filter-Upper-Limit-Offset Standard Setting: **5** *Setting Range: 1….20* *With the setting of 20, this parameter must be disabled for Mode CK !*	Too high measurement values generated due to metal wipers or blades are filtered out. The offset value in % is added to the dynamically calculated upper limit.
Filter-Lower-Limit Standard Setting: **2** *Setting Range: 1…..20* *With the setting of 20, this parameter must be disabled for Mode CK !*	Too low measurement values generated due to insufficient material at the probe head are filtered out. The offset value in % is subtracted from the dynamically calculated lower limit with the negative sign.
Upper-Limit-Keep-Time Standard Setting: **5** *Setting Range: 1...100* *With the setting of 100, this parameter must be disabled for Mode CK !*	The maximum duration (in seconds) of the filter function for Upper-Limit-failures (too high measurement values) can be set with this parameter.
Lower-Limit-Keep-Time Standard Setting: **30** *Setting Range: 1...100* *With the setting of 100, this parameter must be disabled for Mode CK !*	The maximum duration (in seconds) of the filter function for Lower-Limit-failures (too low measurement values) for longer-lasting "material gaps", ie the time in which no material is located on the probe, can be bridged.
Kalman Filter-Parameter in Measurement Mode CK:	
Q-Parameter Standard Setting: **1x10^{-5}** *Setting Range: 0.01…1*x10^{-7}	This Kalman filter parameter **Q** is used to characterize the systemic measurement error. It is recommended to leave this parameter to the default setting!
R-Parameter Standard Setting: **0.033** *Setting Range: 0.01 ….. 0.1*	This Kalman filter parameter **R** is used for smoothing the measurement error. The lower this parameter, the faster is the response to smaller changes in the moisture readings. The higher this parameter is the more smoothed the measured value, but with a delayed reaction time. It is recommended to leave this parameter to the default setting!
K-Parameter Standard Setting: **0.01** *Setting Range: 0.01 ….. 0.2*	This Kalman filter parameter **K** is used for a pre-dynamic behaviour of the Kalman Filter for higher changes in the moisture reading, i.e. the reaction rate of the measurement signal can be affected hereby. The K-parameter is related to the Average-Time. It is recommended to leave this parameter to the default setting!

1.4.1. *Average Time* in the measurement mode CA and CF

SONO-VARIO establishes every 200 milliseconds a new single measurement value which is incorporated into the continual averaging and issues the respective average value in this timing cycle at the analogue output. The averaging time therefore accords to the “memory” of the SONO-VARIO. The longer this time is selected, the more inert is the reaction rate, if differently moist material passes the probe. A longer averaging time results in a more stable measurement value. This should in particular be taken into consideration, if the SONO probe is deployed in different applications in order to compensate measurement value variations due to differently moist materials.

At the point of time of delivery, the *Average Time* is set to 4 seconds. This value has proven itself to be useful for many types of applications. At applications which require a faster reaction rate, a smaller value can be set. Should the display be too “unstable”, it is recommended to select a higher value.

1.4.2. Filtering at material gaps in mode CA and CF

A SONO probe is able to identify, if temporarily no or less material is at the probe head and can filter out such inaccurate measurement values ***(Filter-Lower-Limit)***. Particular attention should be directed at those time periods in which the measurement area of the probe is only partially filled with material for a longer time, i.e. the material (sand) temporarily no longer completely covers the probe head. During these periods (***Lower-Limit-Keep-Time***), the probe would establish a value that is too low. The ***Lower-Limit-Keep-Time*** sets the maximum possible time where the probe could determine inaccurate (too low) measurement values.
Furthermore, the passing or wiping of the probe head with metal blades or wipers can lead to the establishment of too high measurement values (***Filter-Upper-Limit)***. The ***Upper-Limit-Keep-Time*** sets the maximum possible time where the probe would determine inaccurate (too high) measurement values.
Using a complex algorithm, SONO probes are able to filter out such faulty individual measurement values. The standard settings in the **Measurement Mode CA and CF** for the filter functions depicted in the following have proven themselves to be useful for many applications and should only be altered for special applications.

It is appropriate to bridge material gaps in mode CA with Upper- and Lower-Limit Offsets and Keep-Time. For example the Lower-Limit Offset could be adjusted with 2% with a Lower-Limit Keep-Time of 5 seconds. If the SONO probe determines a moisture value which is 2% below the average moisture value with e.g. 8%, than the average moisture value will be frozen at this value during the Lower-Limit Keep-Time of 5 seconds. In this way the material gap can be bridged. This powerful function inside the SONO probe works here as a highpass filter where the higher moisture values are used for building an average value, and the lower or zero values are filtered out. In the following this function is described with SONO parameters.

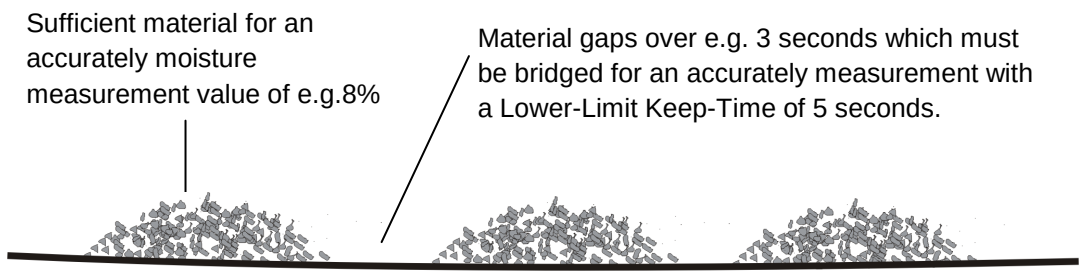

The following parameter setting in mode CA fits a high pass filtering for bridging material gaps.

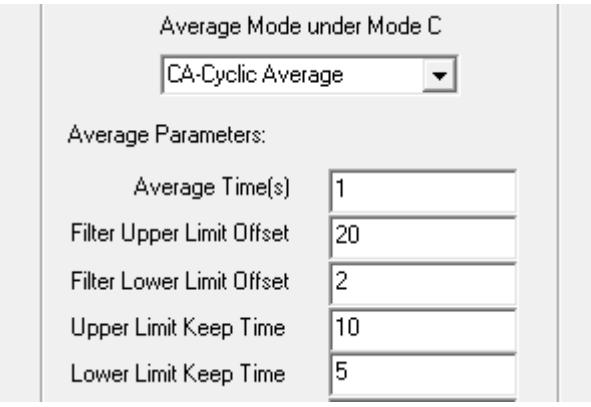

The Filter Upper-Limit is here deactivated with a value of 20, the Filter Lower-Limit is set to 2%. With a Lower-Limit Keep-Time of 5 seconds the average value will be frozen for 5 seconds if a single measurement value is below the limit of 2% of the average value. After 5 seconds the average value is deleted and a new average value building starts. The Keep-Time function stops if a single measurement value lies within the Limit values.

1.4.3. Mode CC – automatic summation of a moisture quantity during one batch process

Simple PLCs are often unable to record moisture measurement values during one batch process with averaging and data storage. Furthermore there are applications without a PLC, where accumulated moisture values of one batch process should be displayed to the operating staff for a longer time. Previously available microwave moisture probes on the market show three disadvantages:

1. Such microwave probes need a switching signal from a PLC for starting the averaging of the probe. This increases the cabling effort.
2. Time delays can occur during the summation time with a trigger signal which leads to measurement errors. This is particularly disadvantageous for small batches, recipe errors can occur.
3. Material gaps during one batch process will lead to zero measurement values which falsify the accumulated measurement value considerably, recipe errors can occur.

Unlike current microwave probes, SONO probes work in mode CC with automatic summation, where it is really ensured that material has contact with the probe. This increases the reliability for the moisture measurement during one complete batch process. The summation is only working if material fits at the probe. Due to precise moisture measurement also in the lower moisture range, SONO probes can record, accumulate and store moisture values during a complete batch process without an external switching or trigger signal. The SONO probe “freezes” the analogue signal as long as a new batch process starts. So the PLC has time enough to read in the “freezed” moisture value of the batch. For applications without a PLC the “freezed” signal of the SONO probe can be used for displaying the moisture value to a simple 7-segment unit as long as a new batch process starts.

With the parameter **Moisture Threshold** the SONO probe can be configured to the start moisture level where the summation starts automatically. Due to an automatic recalibration of SONO probes, it is ensured that the zero point will be precisely controlled. The start level could be variably set dependent to the plant. Recommended is a level with e.g. 0.5% to 1%.

With the parameter **No-Material-Delay** a time range can be set, where the SONO probe is again ready to start a new batch process. Are there short material gaps during a batch process which are shorter than the “No-Material-Delay”, with no material at the probes surface, then the SONO probe pauses shortly with the summation. Is the pause greater as the “No-Material-Delay” then the probe is ready to start a new batch process.

How can the mode CC be used, if the SONO probe cannot detect the „moisture threshold“ by itself, e.g. if there is constantly material above the probe over a longer time: In this case, a short interrupt of the probe´s power supply, e.g for about 0.5 seconds with the help of a relay contact of the PLC, can restart the SONO probe at the beginning of the material transport. After this short interrupt the SONO probe starts immediately with the summarizing and averaging.

Please note: It should be noted that no material sticks on the probes surface. Otherwise the moisture zero point of the probe will be shifted up and the probe would not be detect a moisture low value below the “Moisture-Threshold”.

Following possible parameter settings in mode CC inside the SONO probe can be set:

Parameter in mode CC	***Function***
Moisture Threshold (in %-moisture) Standard Setting: 1 *Setting Range: 1….20*	The accumulation of moisture values starts above the „Moisture Threshold“ and the analogue signal is output. The accumulation pauses if the moisture level is below the threshold value.
No-Material-Delay (in seconds) Standard Setting: 5 *Setting Range: 1….20*	The accumulation stopps if the moisture value is below the moisture threshold. The SONO probes starts again in a new batch with a new accumulation after the time span of the “No-Material-Delay” is exceeded.

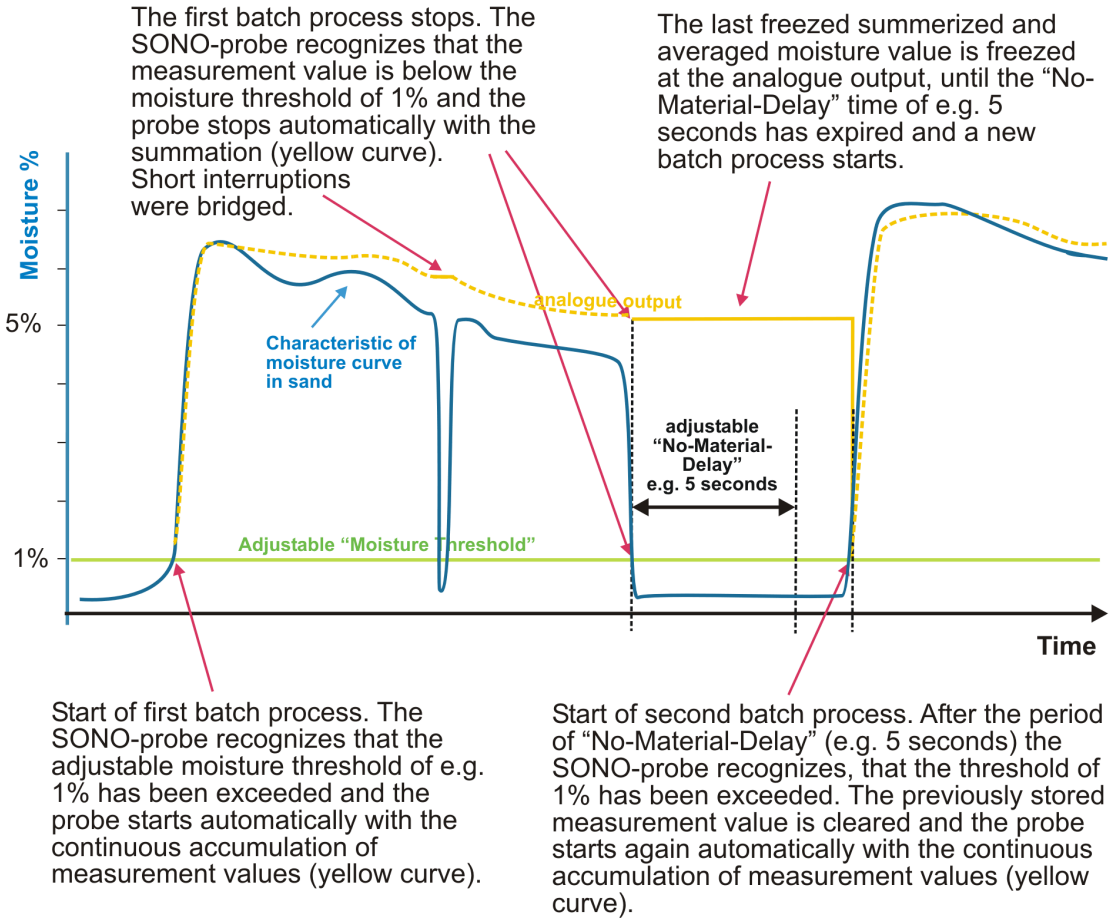

1.4.4. Mode CH – Automatic Moisture Measurement in one Batch

If the PLC already accumulates moisture values, than an additional automatic summation of a moisture quantity inside the SONO-VARIO during one batch process will produce errors.

From the procedure the mode CH is identically with the mode CC, but without automatic summation.

1.5. Calibration Curves

SONO-VARIO is supplied with a universal calibration curve for sand (Cal1: Universal Sand Mix). A maximum of 15 different calibration curves (CAL1 ... Cal15) are stored inside the SONO probe and can optionally be activated via the program **SONO-CONFIG**.

A preliminary test of an appropriate calibration curve (Cal1. .15) can be activated in the menu **"Calibration"** and in the window **"Material Property Calibration"** by selecting the desired calibration curve (Cal1...Cal15) and with using the button "**Set Active Calib**". The finally desired and possibly altered calibration curve (Cal1. .15) which is activated after switching on the probes power supply will be adjusted with the button "**Set Default Calib**".

Nonlinear calibrations are possible with polynomials up to 5th grade (coefficients m0...m5).

IMKO publish on its website more suitable calibration coefficients for different materials. These calibration coefficients can be entered and stored in the SONO probe by hand (Cal14 and Cal15) with the help of SONO-CONFIG.

The charts (Cal.1 .. 15) in the next two pages show different selectable calibration curves which are stored inside the SONO probe.
Plotted is on the y-axis the gravimetric moisture (**MoistAve**) and on the x-axis depending on the calibration curve the associated radar time **tpAve** in picoseconds. With the software **SONO-CONFIG** the radar time **tpAve** is shown on the screen parallel to the moisture value **MoistAve** (see "Quick Guide for the Software SONO-CONFIG). In air, SONO-probes measure typically 60 picoseconds radar time.

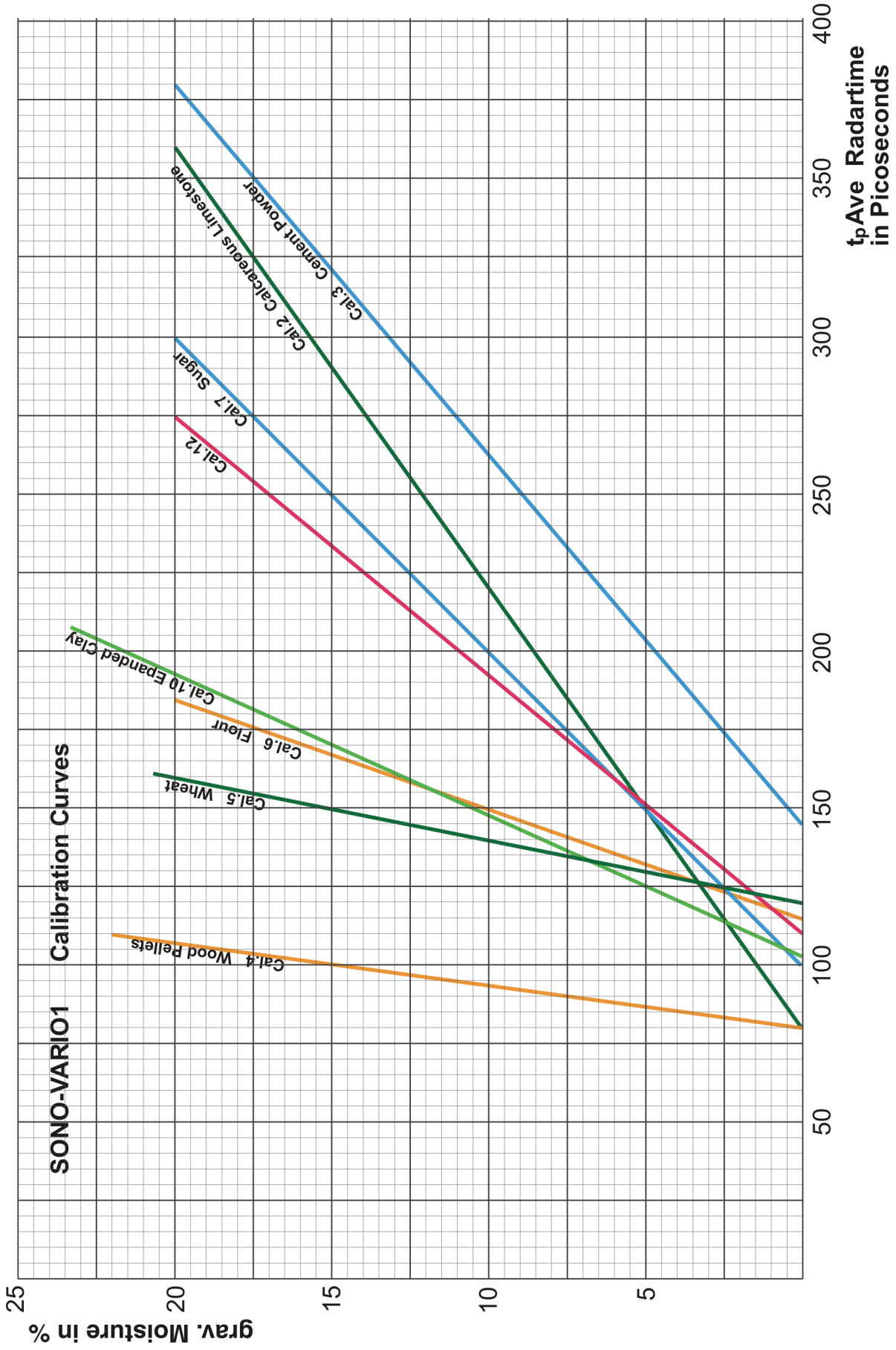
SONO-VARIO1 Calibration Curves
Cal.3 Cement Powder
Cal.2 Calcareous Limestone
Cal.7 Sugar
Cal.12
Cal.10 Expanded Clay
Cal.6 Flour
Cal.5 Wheat
Cal.4 Wood Pellets
grav. Moisture in %
25
20
15
10
5
50
100
150
200
250
300
350
400
tpAve Radartime in Picoseconds

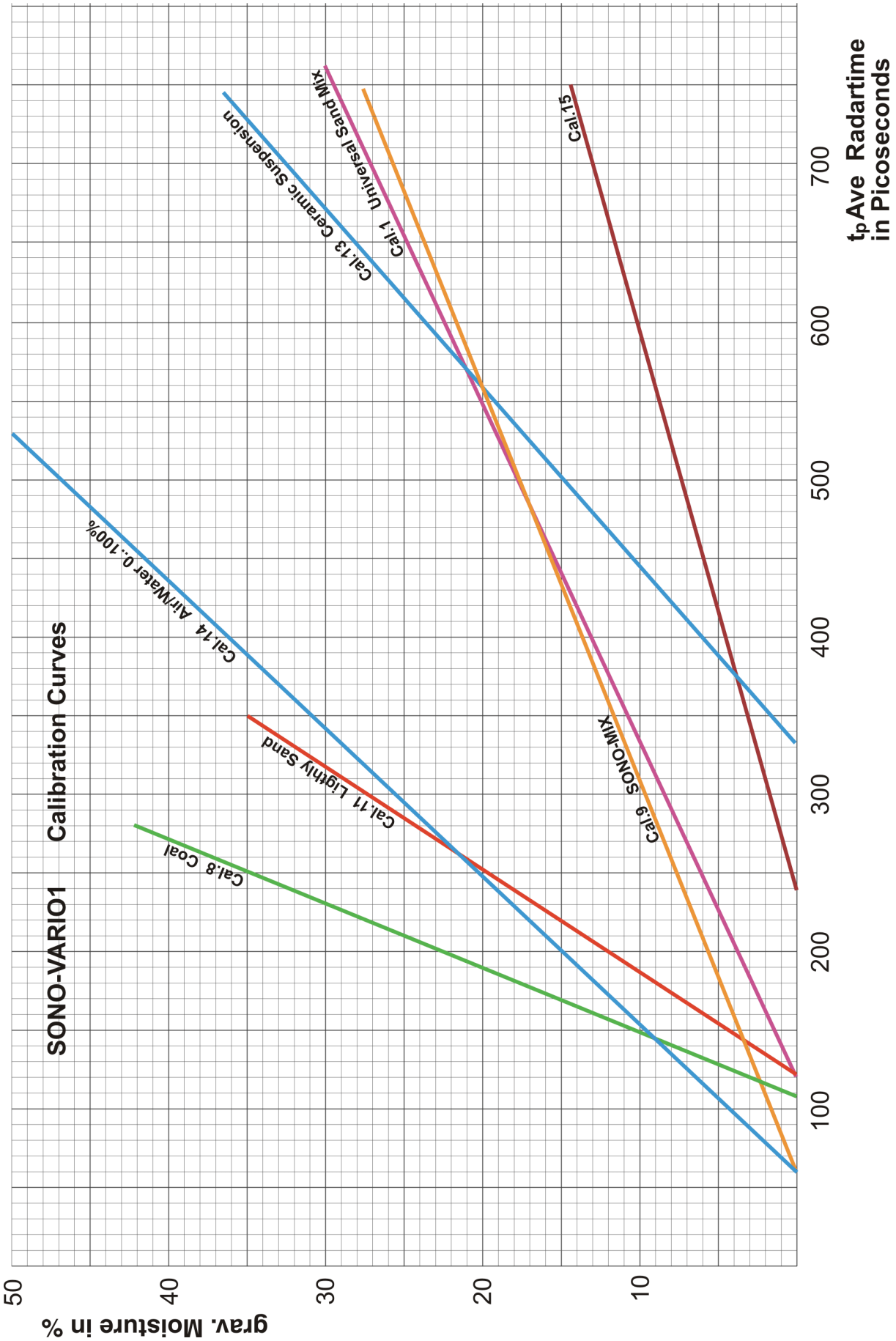
SONO-VARIO1 Calibration Curves
Cal.14 Air/Water 0.:100%
Cal.8 Coal
Cal.11 Lightly Sand
Cal.13 Ceramic Suspension
Cal.1 Universal Sand Mix
Cal.9 SONO-Mix
Cal.15
grav. Moisture in %
50
40
30
20
10
100
200
300
400
500
600
700
tpAve Radartime in Picoseconds

1.5.1. SONO-VARIO for measuring Moisture of Sand and Aggregates

The TRIME-TDR technology with the radar method offers high reliability for measuring moisture of sand and aggregates, as different grain sizes, unlike other measurement techniques such as microwave technology, do not cause any distortion of the measurement result.
The calibration curve Cal1 "Universal Sand Mix" is suitable for measuring the moisture in bulk sand, gravel and gravel/sand granulates. The deviations to the universal calibration curve Cal1 are approximately +-0.5%, depending on the moisture range, for the below listed gravel/sand types.

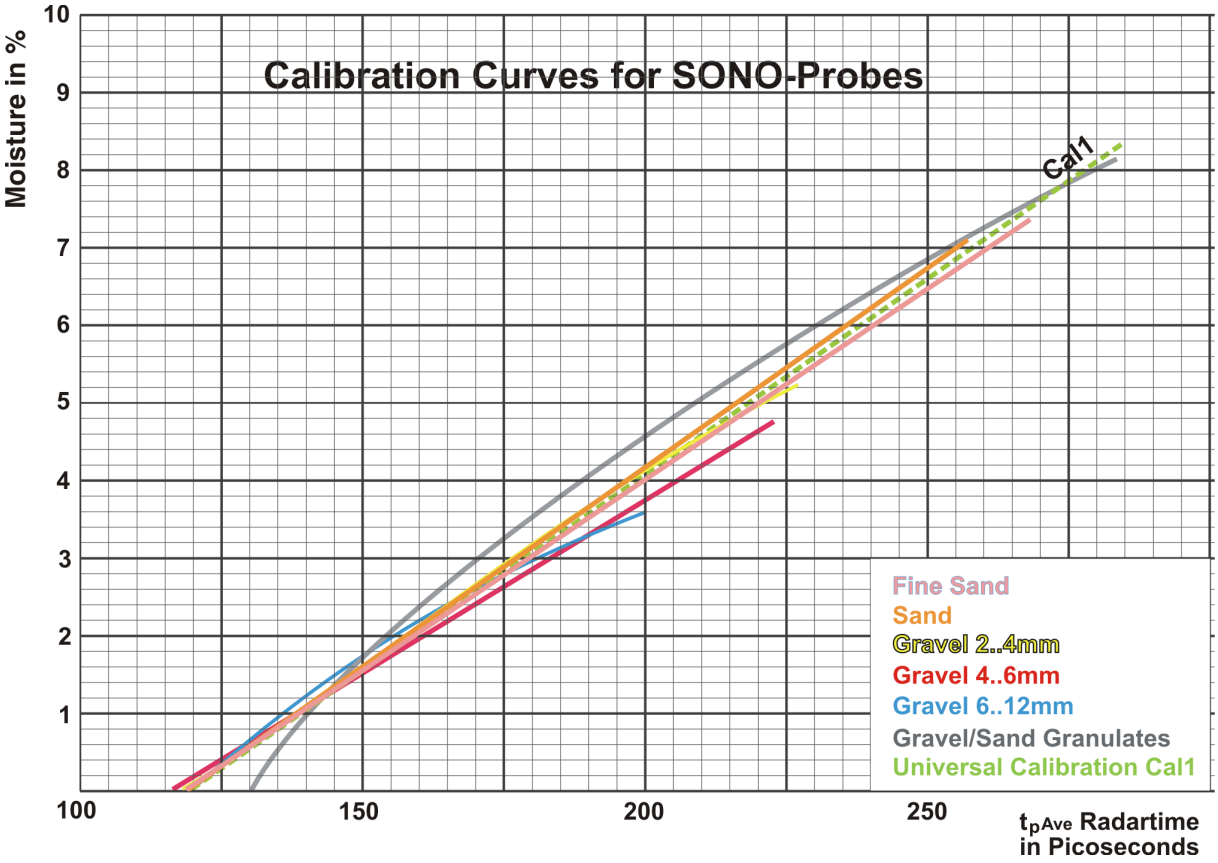

Fine Sand

Sand

Gravel 2..4mm

Gravel 4..6mm

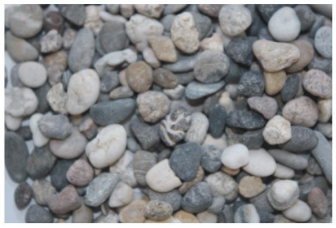
Gravel 6..12mm

Gravel/Sand Granulates

1.5.2. SONO-VARIO for measuring Moisture of Expanded Clay and Lightly Sand

Concerning the material density, expanded clay and lightly sand differ significantly in comparison to sand and gravel. Therefore a separate calibration for each material is necessary. It is to consider that expanded clay below a moisture level of 12% still can absorb more water, ie here it must be calculated with more addition of water into a mixture. At moisture levels above 12% (the maximum core moisture of expanded clay), the surface water of the expanded clay would act as a free addition of water and the addition of water into a mixture should be reduced.
For measuring these two materials the probe calibration Cal10 or Cal11 can be selected.
If you want to use a single SONO probe with the calibration Cal1 for both normal sand/gravel as well as these two materials, then there is the possibility with a simple mathematical conversion inside a PLC. Requirement would be that the PLC knows when and what material is to be measured. You may convert the following:
MoistureLightlySand = MeasurementValueCal1 * Factor of 4

MoistureExpandedClay = MeasurementValueCal1 * Factor of 4.8 + 3.2 Offset
It is to consider that this correction calculation for expanded clay can only be measured above 3.2%, which in practice would be acceptable as it is unlikely that in plant operation the moisture in expanded clay is below 3.2%.

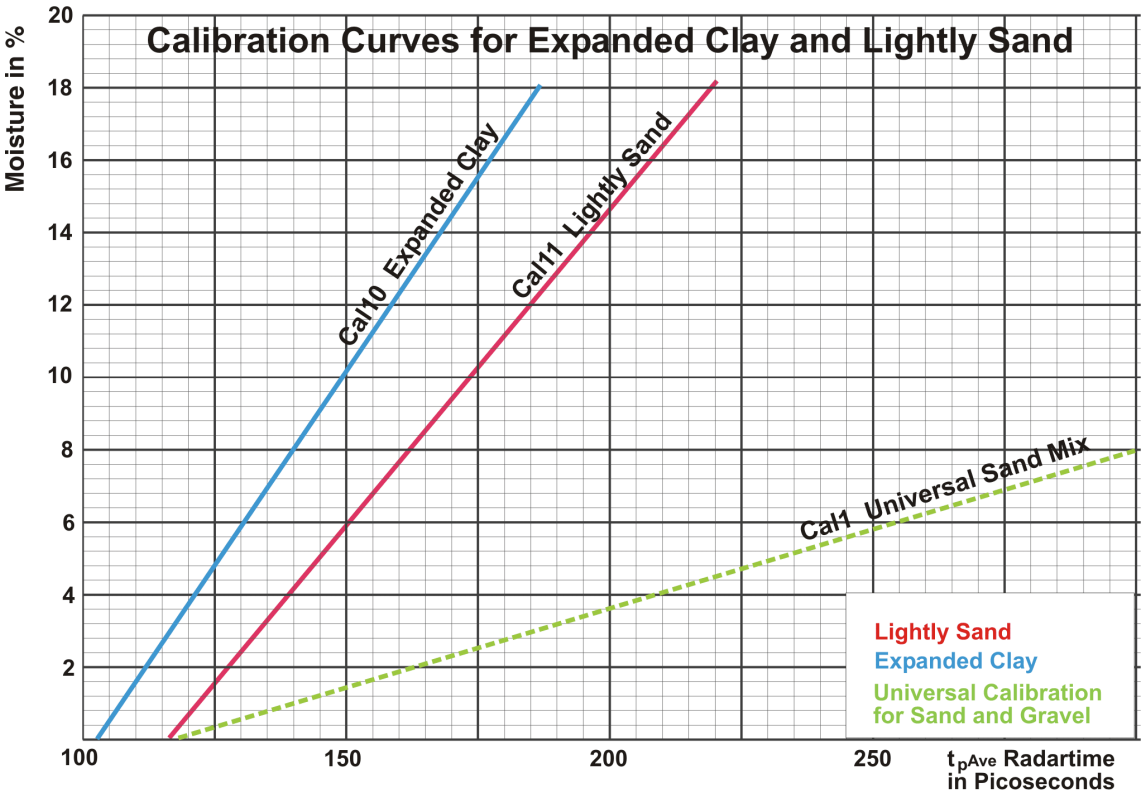

Lightly Sand

Expanded Clay

1.6. Creating a linear Calibration Curve for a specific Material

The calibration curves Cal1 to Cal15 can be easily created or adapted for specific materials with the help of SONO-CONFIG. Therefore, two measurement points need to be identified with the probe. Point P1 at dried material and point P2 at moist material where the points P1 and P2 should be far enough apart to get a best possible calibration curve. The moisture content of the material at point P1 and P2 can be determined with laboratory measurement methods (oven drying). It is to consider that sufficient material is measured to get a representative value.

Under the menu **"Calibration**" and the window "**Material Property Calibration**" the calibration curves CAL1 to Cal15 which are stored in the SONO probe are loaded and displayed on the screen (takes max. 1 minute). With the mouse pointer individual calibration curves can be tested with the SONO-probe by activating the button "**Set Active Calib**". The measurement of the moisture value (**MoistAve)** with the associated radar time **tpAve** at point P1 and P2 is started using the program SONO-CONFIG in the sub menu "**Test**" and "**Test in Mode CF**" (see "Quick Guide for the Software SONO- CONFIG").

Step 1: The radar pulse time **tpAve** of the probe is measured with dried material. Ideally, this takes place during operation of a mixer/dryer in order to take into account possible density fluctuations of the material. It is recommended to detect multiple measurement values for finding a best average value for **tpAve**. The result is the first calibration point P1 (e.g. 70/0). I.e. 70ps (picoseconds) of the radar pulse time **tpAve** corresponds to 0% moisture content of the material. But it would be also possible to use a higher point P1´ (e.g. 190/7) where a **tpAve** of 190ps corresponds to a moisture content of 7%. The gravimetric moisture content of the material, e.g. 7% has to be determined with laboratory measurement methods (oven drying).

Step 2: The radar pulse time **tpAve** of the probe is measured with moist material. Ideally, this also takes place during operation of a mixer/dryer. Again, it is recommended to detect multiple measurement values of **tpAve** for finding a best average value. The result is the second calibration point P2 with X2/Y2 (e.g. 500/25). I.e. **tpAve** of 500ps corresponds to 25% moisture content. The gravimetric moisture content of the material, e.g. 25% has to be determined with laboratory measurement methods (oven drying).

Step 3: With the two calibration points P1 and P2, the calibration coefficients m0 and m1 can be determined for the specific material (see next page).

Step 4: The coefficients m1 = 0.0581 and m0 = -4.05 (see next page) for the calibration curve Cal14 can be entered directly by hand and are stored in the probe by pressing the button “**Set**”. The name of the calibration curve can also be entered by hand. The selected calibration curve (e.g. Cal14) which is activated after switching on the probes power supply will be adjusted with the button "**Set Default Calib**”.

Attention: Use “dot” as separator (0.0581), not comma !

1.6.1. Nonlinear calibration curves

SONO probes can also work with non-linear calibration curves with polynomials up to 5th grade. Therefore it is necessary to calibrate with 4…8 different calibration points. To calculate nonlinear coefficients for polynomials up to 5th grade, an EXCEL software tool from IMKO can be used (on request). It is also possible to use any mathematical program like MATLAB for finding a best possible nonlinear calibration curve with suitable coefficient parameters m0 to m5 which can be entered into the probe with help of SONO-CONFIG.

The following diagram shows a sample calculation for a linear calibration curve with the coefficients m0 and m1 for a specific material.

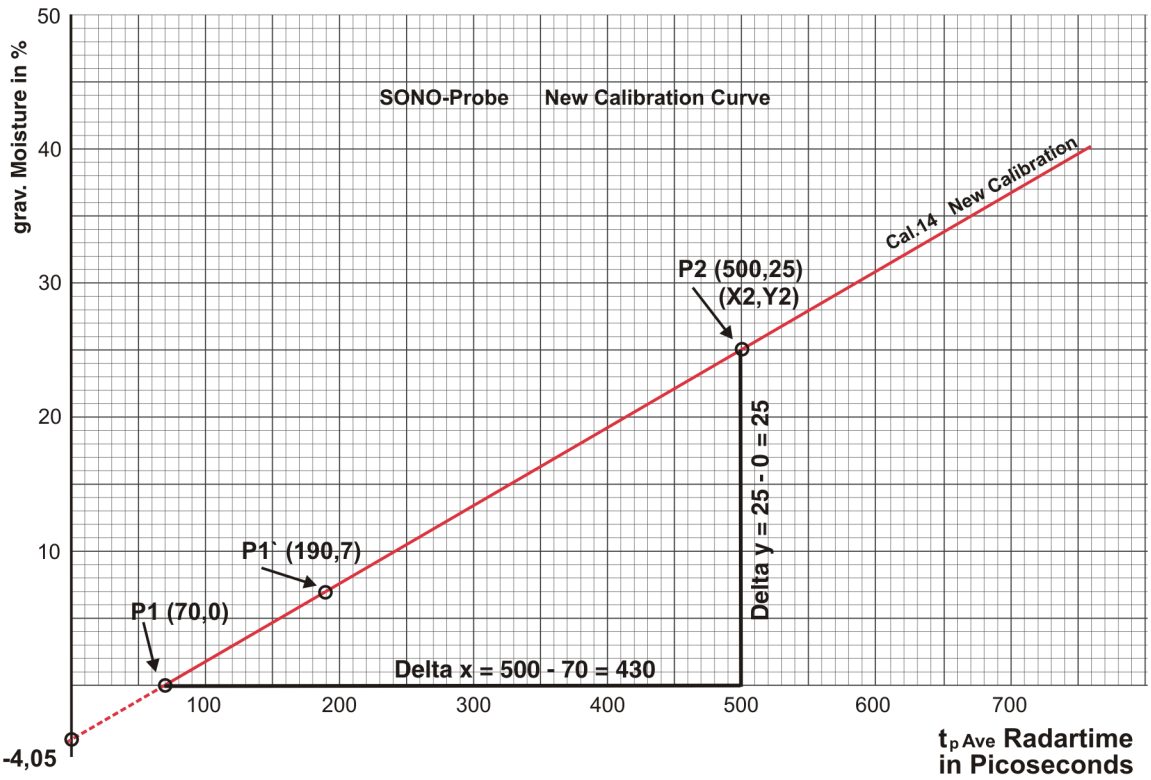

The coefficient m_1 is calculated from the slope of the curve Cal14:

$$\text{Coefficient } m_1 = \frac{\text{Delta y}}{\text{Delta x}} = \frac{25 - 0}{500 - 70} = 0{,}0581$$

The coefficient m_0 is the offset on the y-axis at x = 0:

$$\text{Coefficient } m_0 = Y2 - (m_1 * X2) = 25 - (0{,}0581 * 500) = -4{,}05$$

1.7. Connectivity to SONO Probes

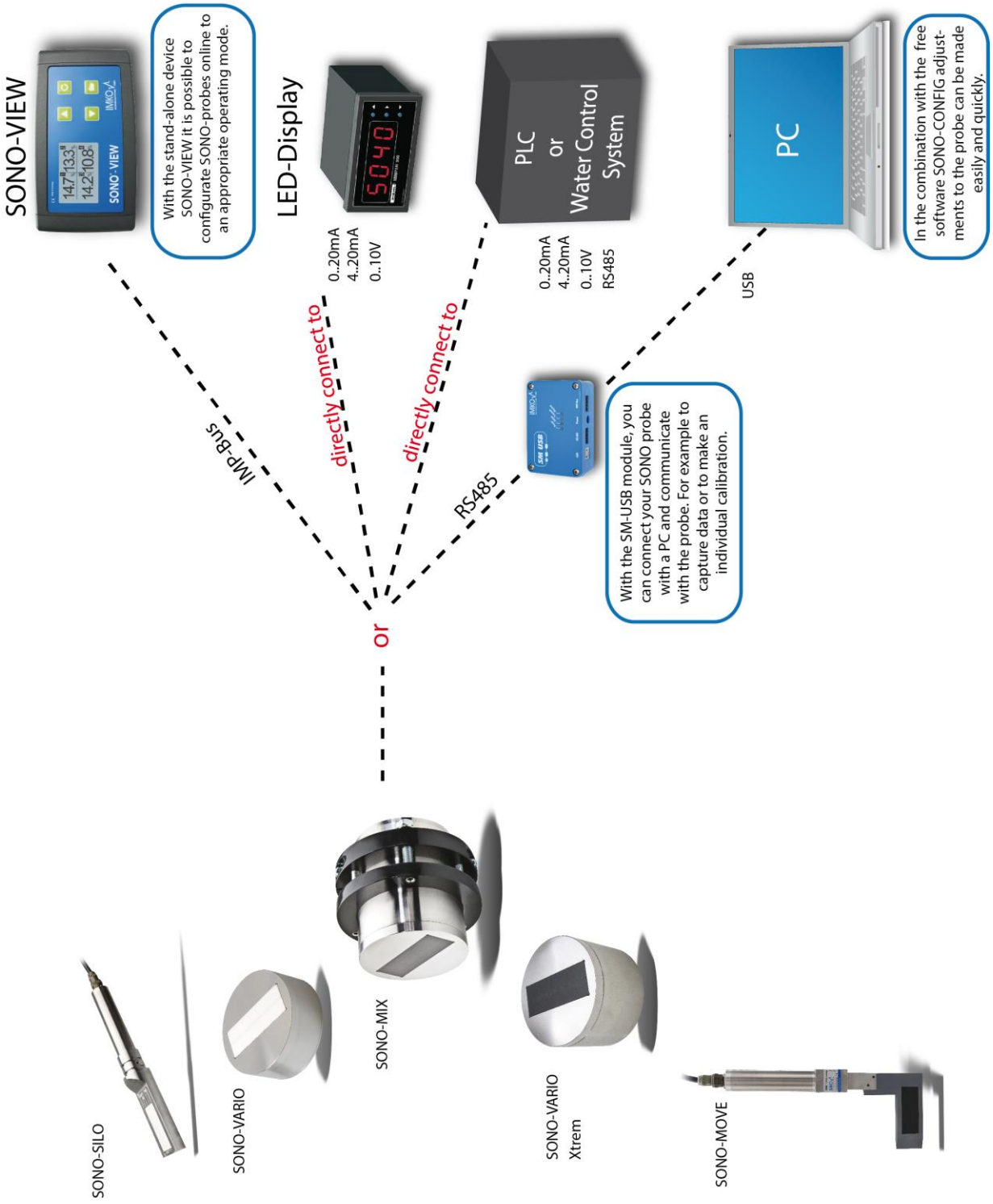

1.7.1. Connection Plug and Plug Pinning

SONO-VARIO is supplied with a 10-pole MIL flange plug.

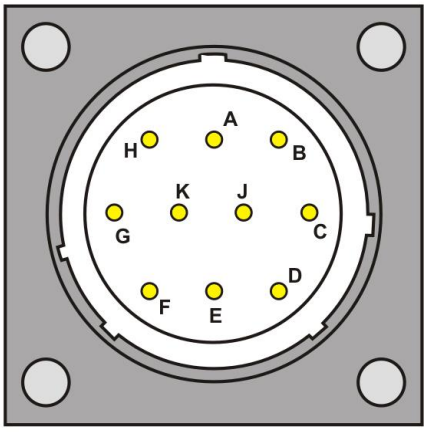

Assignment of the 10-pole MIL Plug and sensor cable connections:

Plug-PIN	Sensor Connections	Lead Colour
A	+7V….24V Power Supply	red
B	0V Power Supply	blue
D	1. Analogue Positive (+) Moisture	green
E	1. Analogue Return Line (-) Moisture	yellow
F	RS485 A	white
G	RS485 B	brown
C	(rt) IMP-Bus	(grey/pink)
J	(com) IMP-Bus	(blue/red)
K	2. Analogue Positive (+)	pink
E	2. Analogue Return Line (-)	grey
H	Screen (is grounded at the sensor. The plant must be properly grounded!)	transparent

1.7.2. Analogue Output 0..10V with a Shunt-Resistor

There are PLC´s which have no current inputs 0..20mA, but voltage inputs 0..10V. With the help of a shunt resistor with 500 ohm (in the delivery included) it is possible to generate a 0..10V signal from the current signal 0..20mA. The 500 ohm shunt resistor should be placed at the end of the line resp. at the input of the PLC. Following drawing shows the circuit principle.

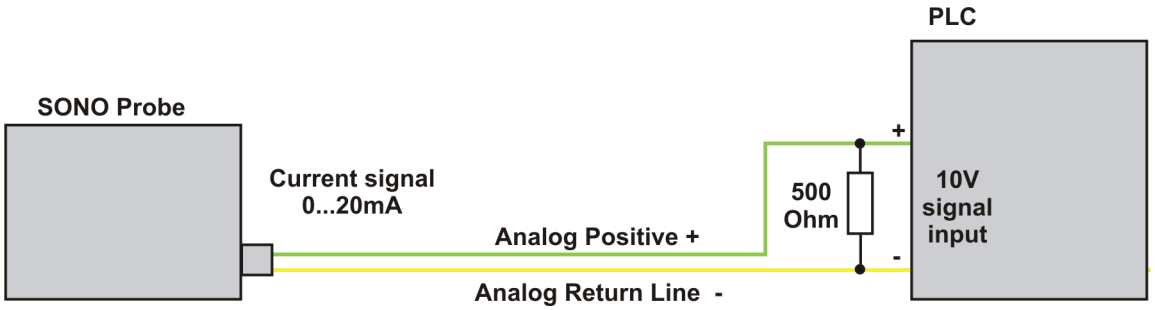

1.8. Connection of the RS485 to the SM-USB Module from IMKO

The SM-USB provides the ability to connect a SONO probe either to the standard RS485 interface or optionally to the IMP-Bus from IMKO, which enables the download of a new firmware to the SONO probe. Both connector ports are shown in the drawing below.
The SM-USB is signalling the status of power supply and the transmission signals with 4 LED´s. When using a dual-USB connector on the PC, it is possible to use the power supply for the SONO probe directly from the USB port of the PC without the use of the external AC adapter.

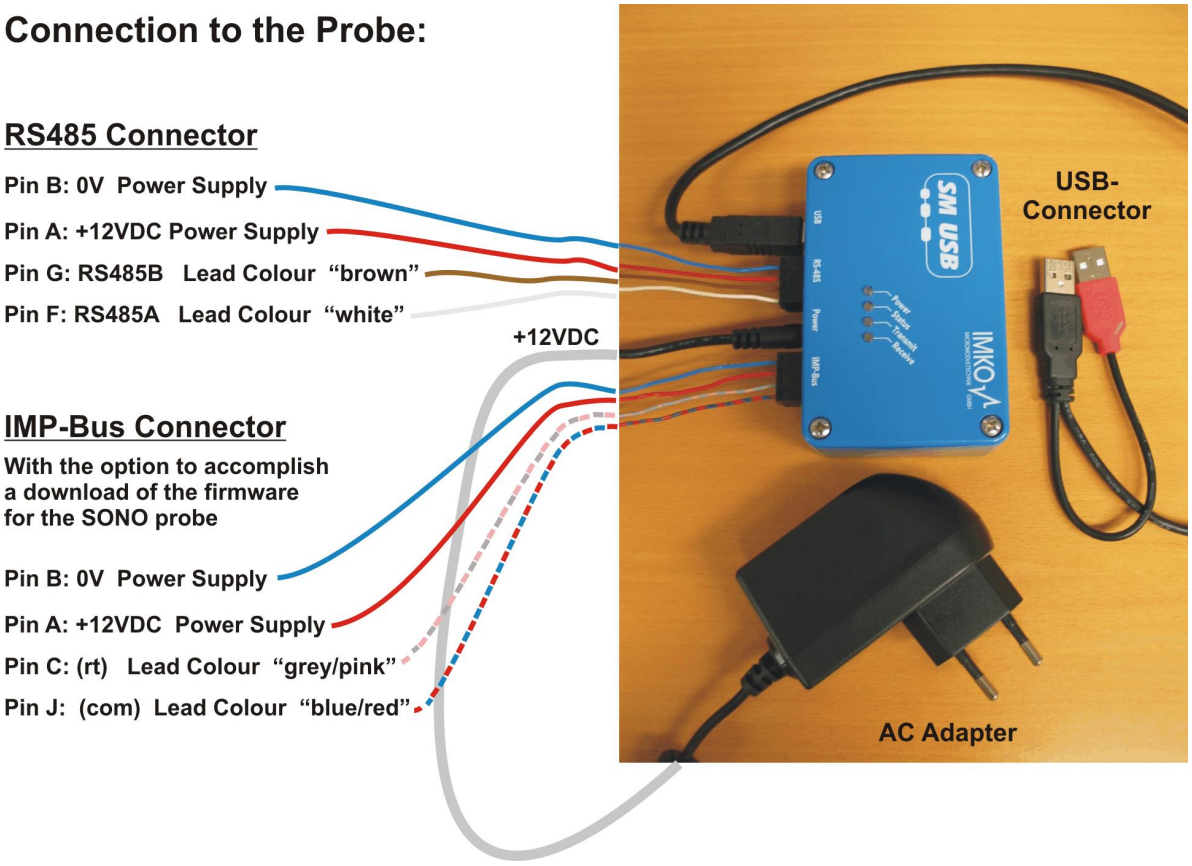

How to start with the USB-Module SM-USB from IMKO

- Install USB-Driver from USB-Stick.
- Connect the SM-USB to the USB-Port of the PC and the installation will be accomplished automatically.
- Install Software **SONOConfig-SetUp.msi** from USB-Stick.
- Connection of the SONO probe to the EX9531 via RS485A, RS485B and 0V.
- Check the setting of the COM-Ports in the Device-Manager und setup the specific COM-Port with the Baudrate of 9600 Baud in SONO-CONFIG with the button "**Bus**" and "**Configuration**" (COM1-COM15 is possible).
- Start "**Scan probes**" in SONOConfig.
- The SONO probe logs in the window „**Probe List**" after max. 30 seconds with its serial number.

Note 1:

In the Device-Manager passes it as follows:

Control Panel → System → Hardware → Device-Manager

Under the entry “Ports (COM & LPT) now the item “USB Serial Port (COMx)” is found.

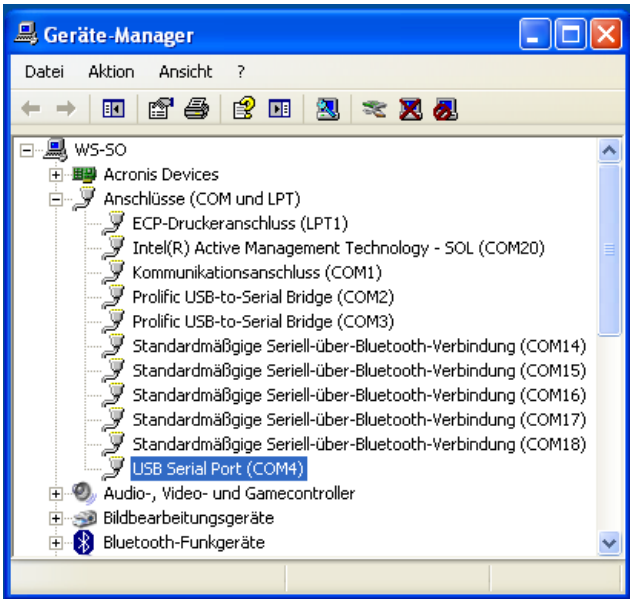

COMx set must be between COM1….COM9 and it should be ensured that there is no double occupancy of the interfaces.

If it comes to conflicts among the serial port or the USB-SM has been found in a higher COM-port, the COM port number can be adjusted manually:
By double clicking on "USB Serial Port" you can go into the properties menu, where you see "connection settings" – with "Advanced" button, the COM port number can be switched to a free number.

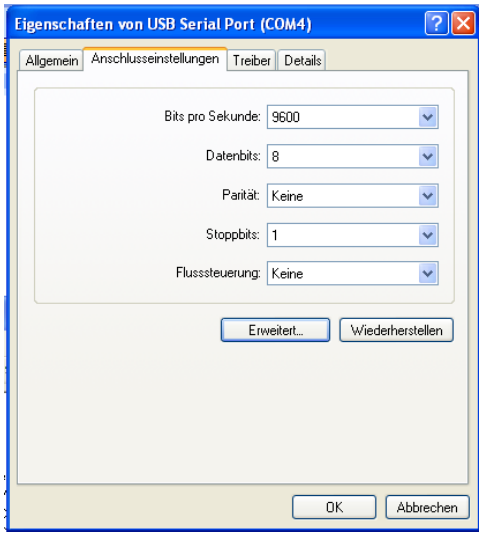

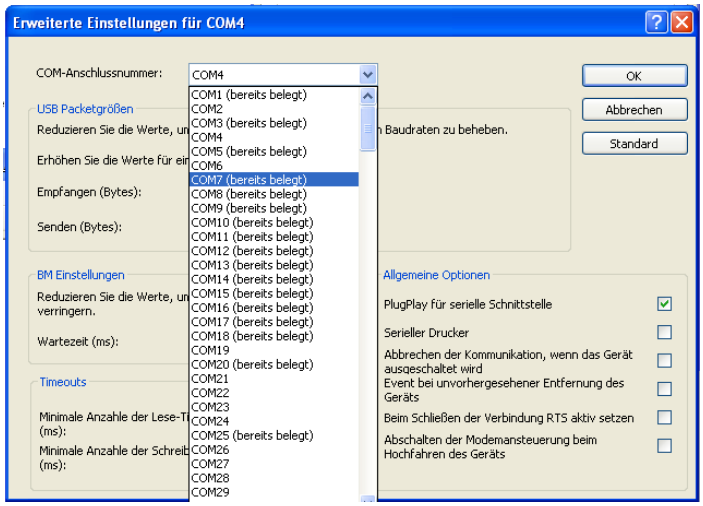

After changing the COMx port settings, SONO-CONFIG must be restarted.

2. Quick Guide for the Software SONO-CONFIG

With SONO-CONFIG it is possible to make process-related adjustments of individual parameters of the SONO probe. Furthermore the measurement values of the SONO probe can be read from the probe via the RS485 interface and displayed on the screen.

In the menu **"Bus**" and the window "**Configuration**" the PC can be configured to an available COMx-port with the Baudrate of 9600 Baud.

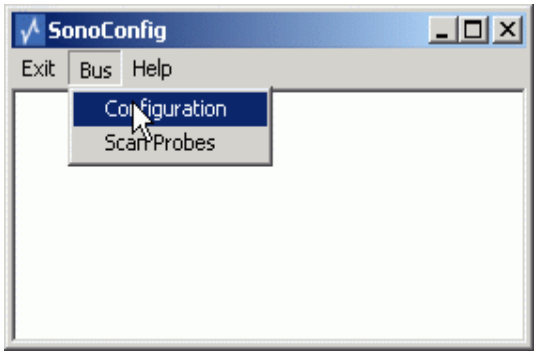

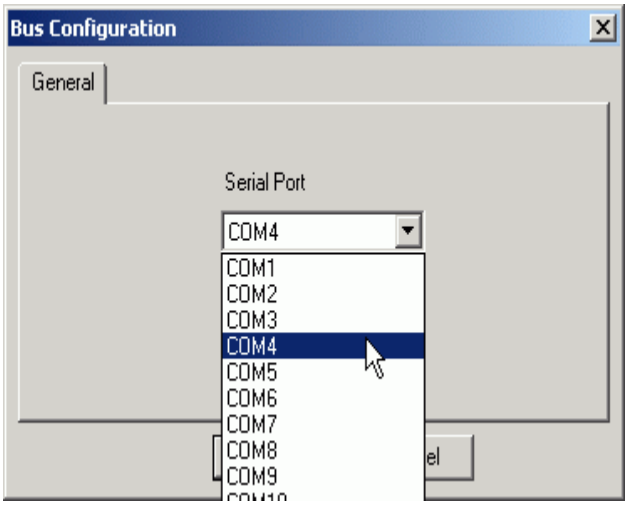

2.1.1. Scan of connected SONO probes on the RS485 interface

In the menu **"Bus**" and the window "**Scan Probes**" the RS485 bus can be scanned for attached SONO probes (takes max. 30 seconds).

SONO-CONFIG reports founded SONO probes with its serial number in the window "**Probe List**".

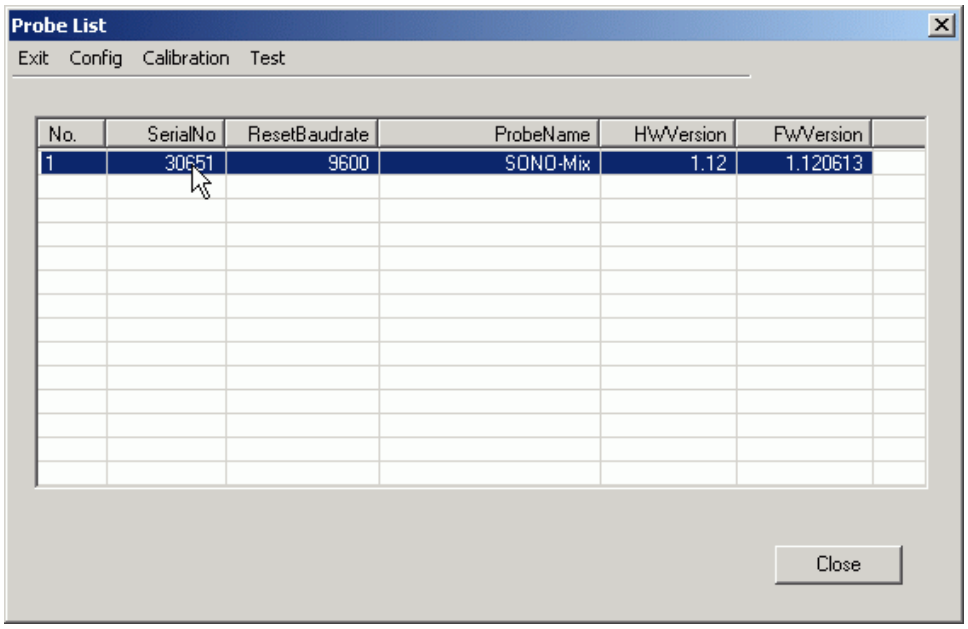

2.1.2. Configuration of Measure Mode

In "**Probe List**" with "**Config**" and "**Measure Mode & Parameters**" the SONO probe can be adjusted to the desired mode CA, CF or CS (see Chapter "Configuration Measure Mode").

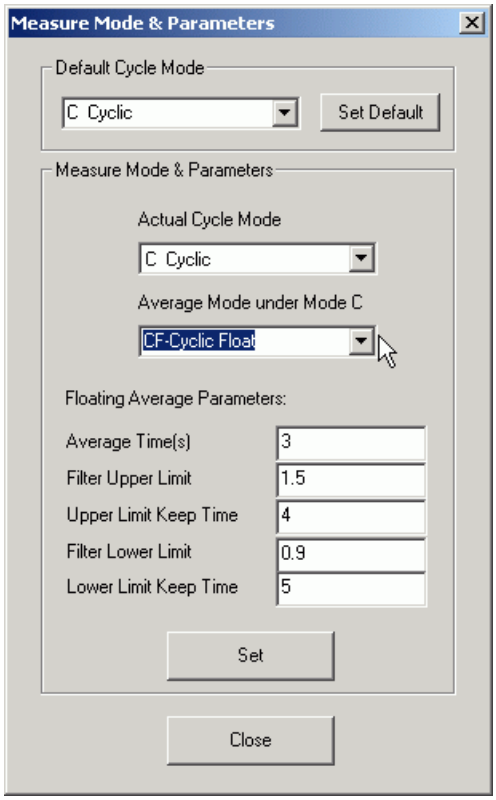

2.1.3. Analogue outputs of the SONO probe

In the menu "**Config**" and the window "**Analog Output**" the analogue outputs of the SONO probe can be configured (see Chapter "Analogue outputs..").

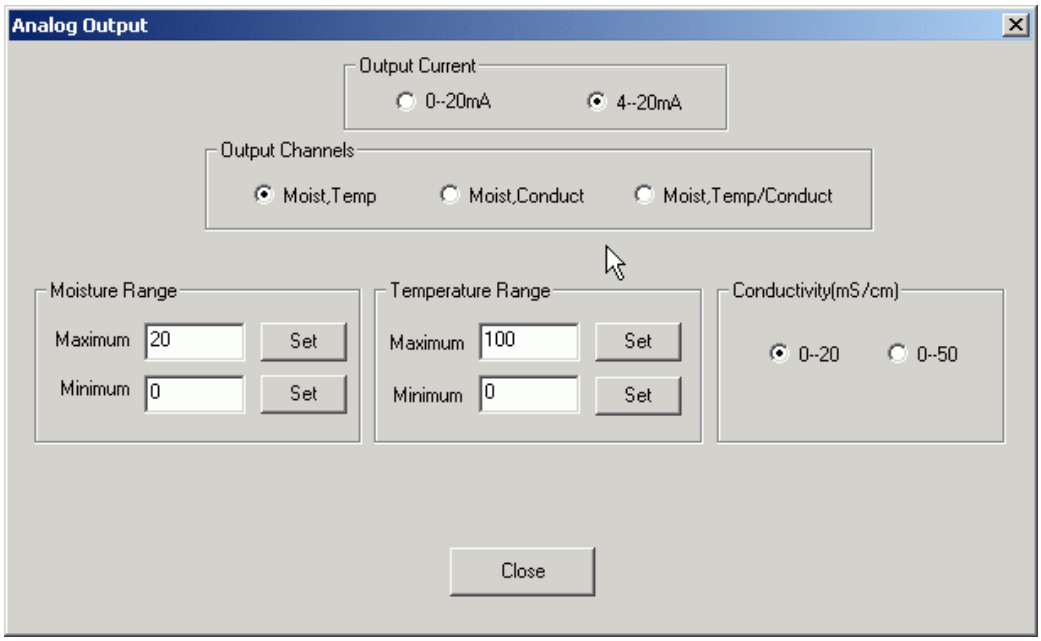

2.1.4. Selection of the individual Calibration Curves

In the menu **"Calibration**" and the window "**Material Property Calibration**" the calibration curves CAL1 to Cal15 which are stored in the SONO probe are loaded and displayed on the screen (takes max. 1 minute). With the mouse pointer individual calibration curves can be activated and tested with the SONO-probe by activating the button "**Set Active Calib**". Furthermore, the individual calibration curves CAL1 to Cal15 can be adapted or modified with the calibration coefficients (see Chapter “Creating a linear calibration curve”).

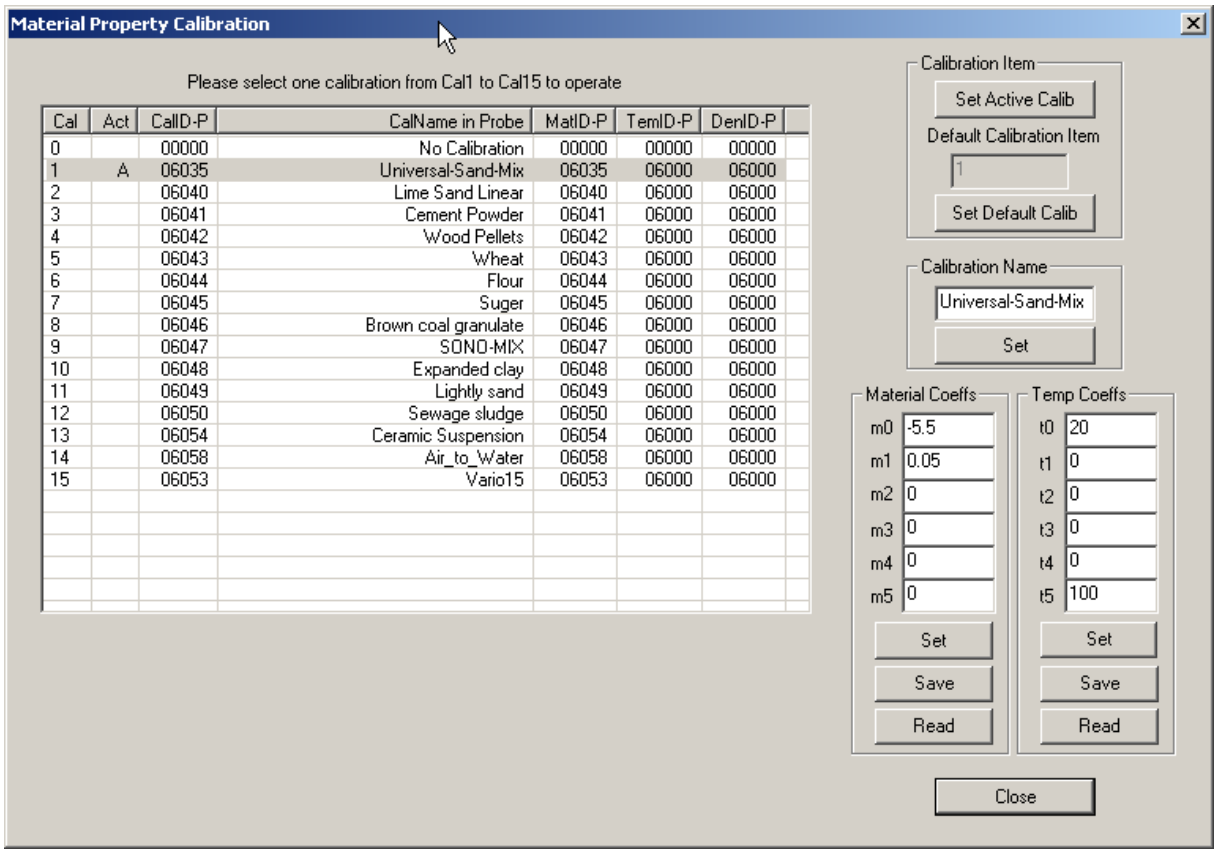

The desired and possibly altered calibration curve (Cal1. .15) which is activated after switching on the probes power supply can be adjusted with the button "**Set Default Calib**".

The calibration name can be entered in the window “Calibration Name”.

The coefficients m0 to m1 (for linear curves) and m0 to m5 (for non-linear curves) can be entered and adjusted directly by hand with the buttons “**Set**” and “**Save**”.

Possible are non-linear calibration curves with polynomials up to fifth order (m0-m5).

Attention: Use “dot” as separator for m0 to m5 not comma !

2.1.5. Test run in the respective Measurement Mode

In the menu "**Test**" and the window "**Test in Mode CA or CF**" the measured moisture values **"MoistAve"** (Average) of the SONO probe are displayed on the screen and can be parallel saved in a file. In the menu "**Test**" and the window "**Test in Mode CS**" the measured single measurement values "**Moist**" (5 values per second) of the SONO probe are displayed on the screen and parallel stored in a file. In „**Test in Mode A"** single measurement values (without average) are displayed on the screen and can also be stored in a file.

Attention: for a test run in mode CA, CF, CS or A it must be ensured that the SONO probe was also set to this mode (Measure Mode CA, CF, CS, A). If this is not assured, the probe returns zero values.

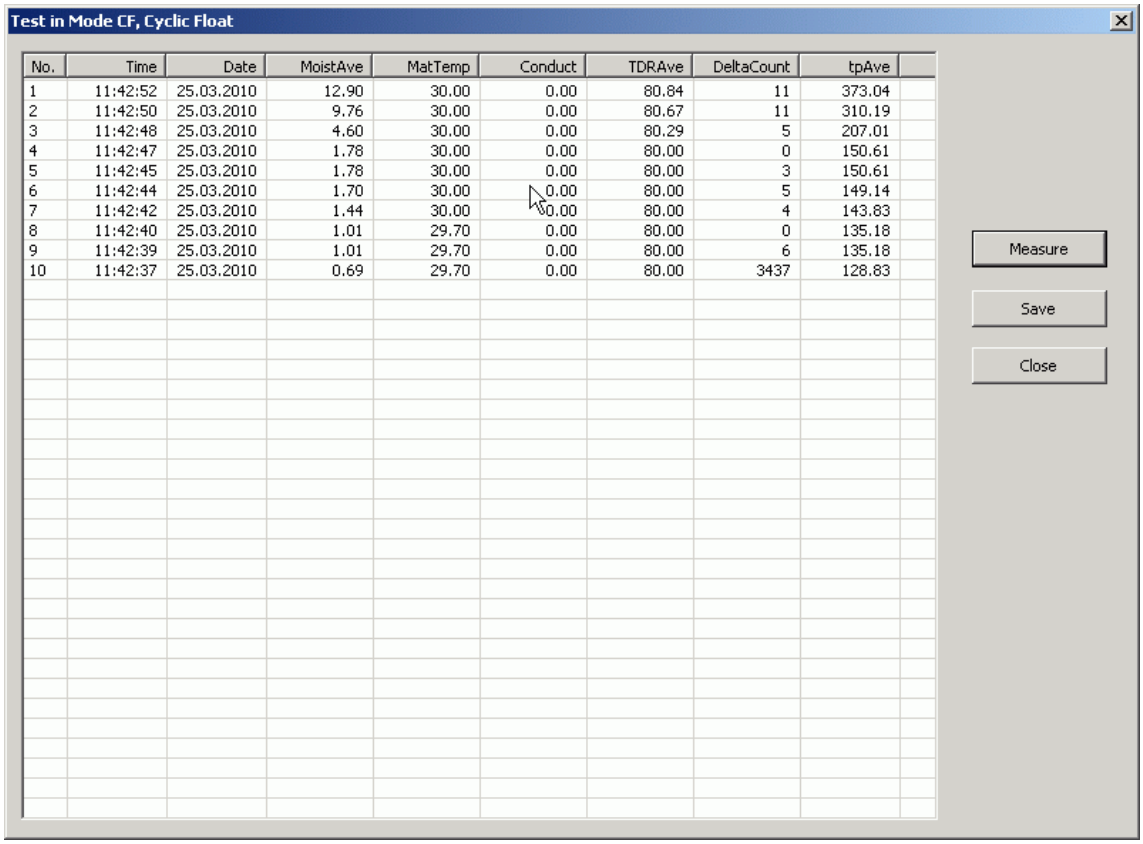

No.	Time	Date	MoistAve	MatTemp	Conduct	TDRAve	DeltaCount	tpAve
1	11:42:52	25.03.2010	12.90	30.00	0.00	80.84	11	373.04
2	11:42:50	25.03.2010	9.76	30.00	0.00	80.67	11	310.19
3	11:42:48	25.03.2010	4.60	30.00	0.00	80.29	5	207.01
4	11:42:47	25.03.2010	1.78	30.00	0.00	80.00	0	150.61
5	11:42:45	25.03.2010	1.78	30.00	0.00	80.00	3	150.61
6	11:42:44	25.03.2010	1.70	30.00	0.00	80.00	5	149.14
7	11:42:42	25.03.2010	1.44	30.00	0.00	80.00	4	143.83
8	11:42:40	25.03.2010	1.01	29.70	0.00	80.00	0	135.18
9	11:42:39	25.03.2010	1.01	29.70	0.00	80.00	6	135.18
10	11:42:37	25.03.2010	0.69	29.70	0.00	80.00	3437	128.83

Following measurement values are displayed on the screen:

MoistAve	Moisture Value (Average)
MatTemp	Temperature
Conduct	Radar-based-Conductivity RbC
TDRAve	TDR-Level (for special applications)
DeltaCount	Number of single measurements which are used for the averaging.
tpAve	Radar time (average) which corresponds to the respective moisture value.

By clicking „**Save**" the recorded data is saved in a text file in the following path:
\SONO-CONFIG.exe-Pfad\MD\Dateiname

The name of the text file **Statis+SN+yyyymmddHHMMSS.sts** is assigned automatically with the serial number of the probe (SN) and date and time.
The data in the text file can be evaluated with Windows-EXCEL.

2.1.6. Basic Balancing in Air and Water

SONO probe heads are identical and manufactured precisely. After an exchange of a probe head it is nevertheless advisable to verify the calibration and to check the basic calibration and if necessary to correct it with a “Basic Balancing”.
With a “Basic Balancing” two reference calibration measurements are to be carried out with known set-points ("RefValues"). For the reference media, different calibration materials are used, dependent on the SONO probe type. For SONO probes with ceramic window like SONO-VARIO, MIX, SILO and MOVE, air and water (tap water) is used. For other SONO probes like SONO-GS1 glass beads are used for basic calibrations (on request).

Attention: Before performing a “Basic Balancing” it must be ensured that the SONO probe was set to “Measure Mode” A. If this is not assured, the probe returns zero values. After a “Basic Balancing” the SONO probe has to be set to “Measure Mode C” again, because otherwise the probe would not measure continuously.

In the menu **"Calibration**" and the window "**Basic Balancing**" the two set-point values of the radar time **tp** are displayed with 60ps and 1000ps.

1. Reference set-point A: **tp**=60ps in air (the surface of the probe head must be dry!!)
   The first set-point can be activated with the mouse pointer by clicking to No.1. By activating the button "**Do Measurement**" the SONO probe determines the first reference set-point in air. In the column „MeasValues“ the measured raw value of the radar time **t** is displayed (e.g. 1532.05 picoseconds).
2. Reference set-point B: **tp**=1000ps in water. The SONO probe head has to be covered with water in a height of about 50mm. The second set-point can be activated with the mouse pointer by clicking to No.2. By activating the button "**Do Measurement**" the SONO probe determines the second reference set-point in water. In the column „MeasValues“ the measured raw value of the radar time **t** is displayed.
3. By activating the button „**Calculate Coeffs**“ and „**Coeffs → Probe**“ the alignment data is calculated automatically and is stored in the SONO probe non-volatile. With a “Test run” (in Mode A) the radar time **tp** of the SONO probe should be now 60ps in air and 1000ps in water.

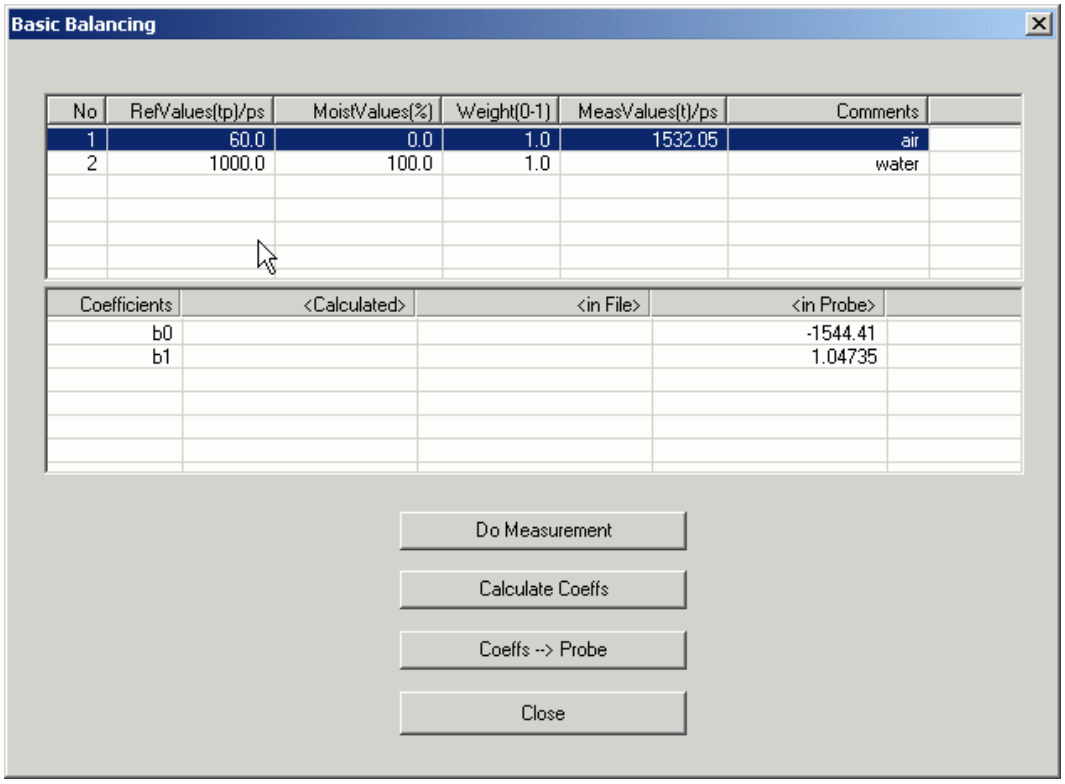

3. Installation of the Probe

The installation conditions are strongly influenced by the constructional circumstances of the installation facility. The ideal installation location must be established individually. For measuring sand, gravel and grit, the SONO-VARIO should ideally be installed under a silo valve, which has many advantages (see below).

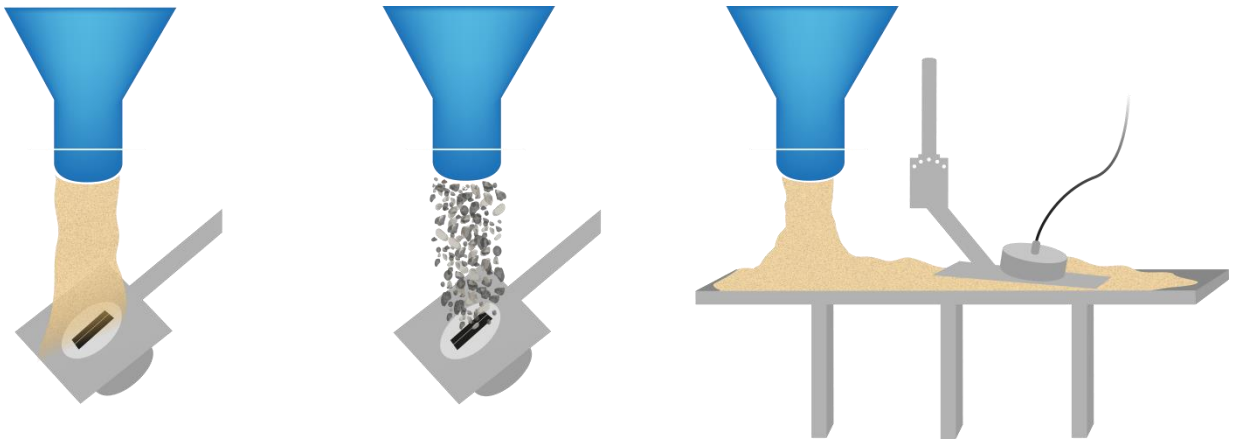

Installation of the SONO-VARIO for measuring sand, gravel and grit, under a silo valve or on a conveyor belt. Dependent on material, it is important to find the suitable angle of the mounting plate. It should be not too steep, but also not too flat.

It should be mentioned, that with the innovative features of SONO-probes and an extremely rugged design, it is possible, to install a SONO-VARIO directly under valves of silos, also for gravel with 32mm size. The installation inside a silo could be also possible, but it must be observed, that during filling and emptying, no material (e.g. sand) can be stick on the probes surface, which could be result in measurement errors. The following instructions should be followed when installing the probe:

The SONO-VARIO should be installed ideally under a valve of the silo, which has many advantages:

1. The material flows constant and therefore the material density is constant which guarantees more precise measurement values.
2. Due to higher material pressure, the probe´s surface is cleaned continously. Material sticking and therefore measurement errors are be prevented.
3. The SONO-VARIO can detect clearly the start and the end of a batch process. So the SONO-VARIO can calculate an automatic summation of the moisture quantity during one batch process in mode CC. Even short batches with few material can be precisely measured. Further advantage is that the PLC programming can be made more simple without switching signals.

3.1. Further Assembly Instructions

- With the universal holder, deliverable by Imko, the SONO-VARIO can be placed above a conveyor belt. Particularly with inhomogeneous or loose sand, the material can be constantly condensed, which leads to higher measurement results.
- The installation locations may not be situated beneath the inlets for additives.
- In case of an uneven base, the probe must be installed at the highest point of the base. No water may accumulate at the probe head as this could falsify the measurement.
- Areas with strong turbulences are not ideal for the installation. There should be a continuous material flow above the probe head.
- The stirring movement of blades should be conducted without gap above the probe head.
- The probe should not be installed in the direct vicinity of electrical disturbing sources such as motors.
- In case of curved installation surfaces in containers, the centre of the probe head should be flush with the radius of the container wall without disturbing the radial material flow in the container. The probe may not project and come in contact with blades or wipers.

Attention! Risk of Breakage!

The probe head is made of special steel and a very wear-resistant ceramic in order to warrant for a long life-span of the probe. In spite of the robust and wear-resistant construction, the ceramic plate may not be exposed to any blows as ceramic is prone to breakage.

In case of welding work at the plant, all probes must be completely electrically disconnected.

Any damage caused by faulty installation is not covered by the warranty!

Abrasive wear of sensor parts is not covered by the warranty!

3.2. Assembly Dimensions

SONO-VARIO can either be installed at the base or the side wall of containers. One fact to consider is that the installation into the container base also enables the measurement of smaller material quantities. A mounting flange is available for SONO-VARIO. The flange can both be welded on to the base and the side wall of the container. The probe can be adjusted to the correct position, respectively correct installation height.

SONO-VARIOStandard:

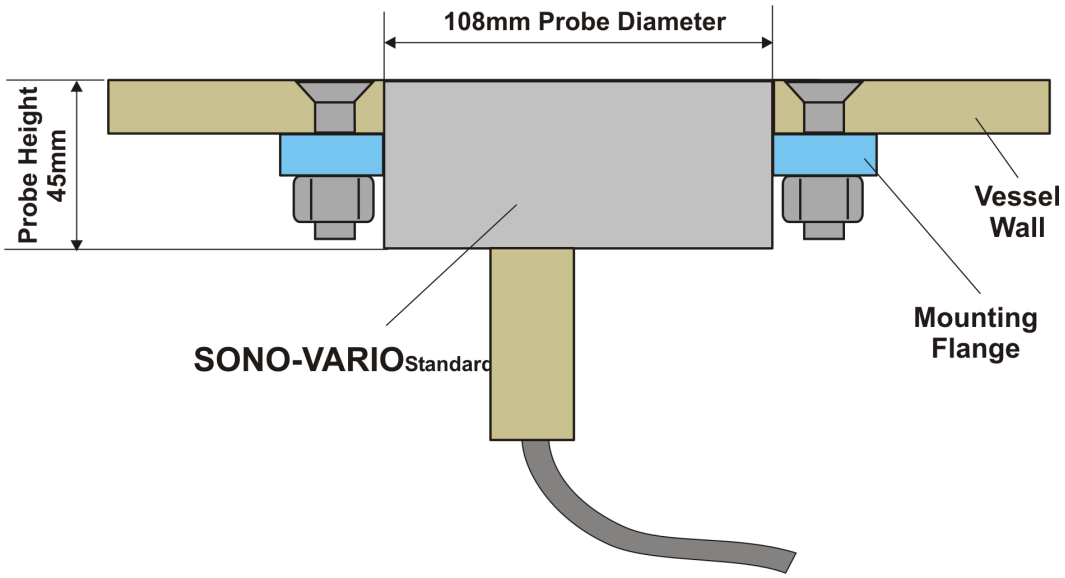

SONO-VARIOXtrem and VARIOLD

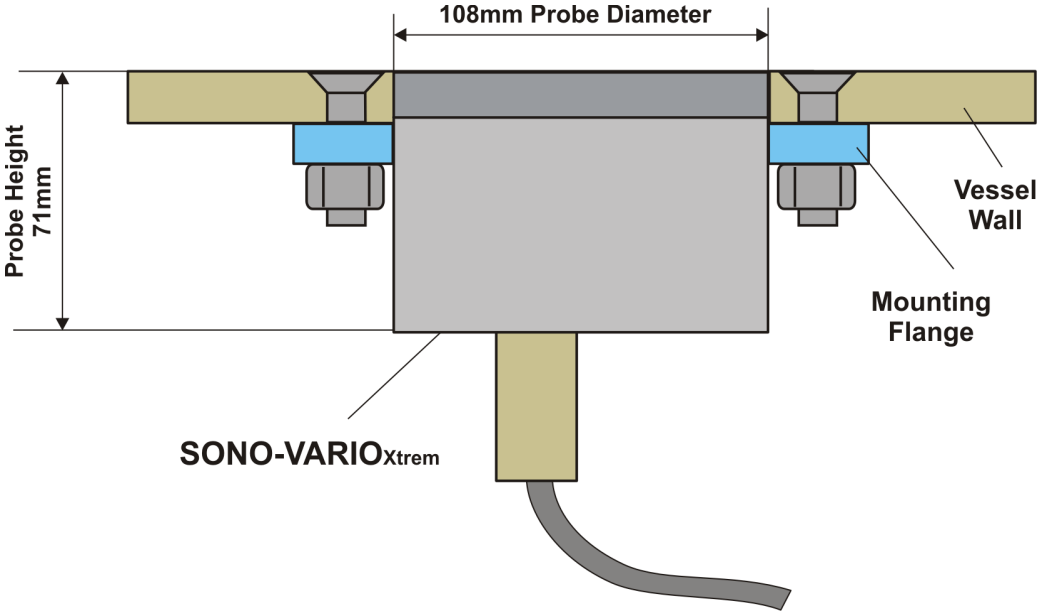

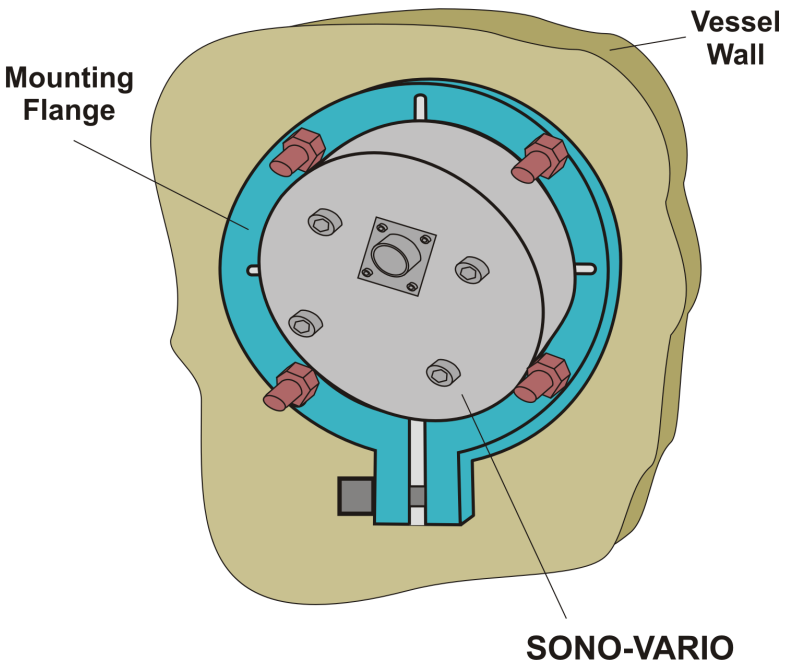

Dimensions of the Mounting Flange

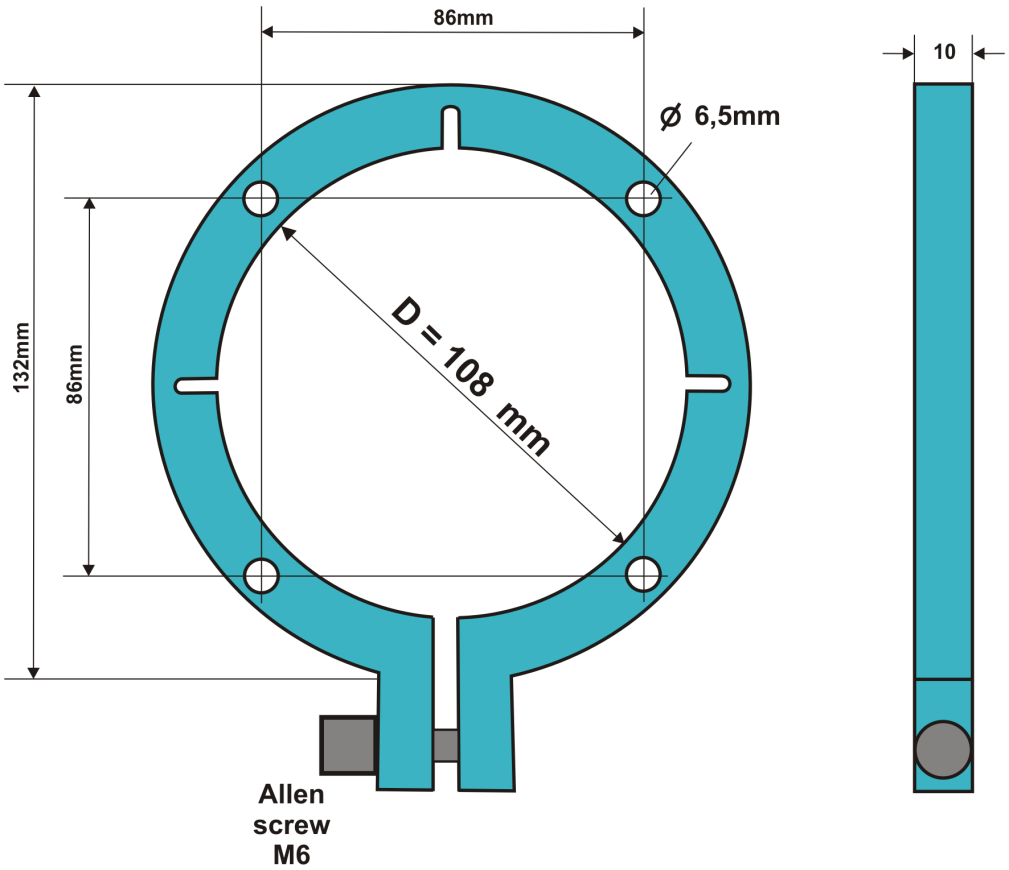

3.3. Mounting in curved Surfaces

In order to prevent the probe head from projecting and interfering with wipers, the centre of the probe head should be flush with the radius of the wall. The ceramic must be laterally aligned to the rotational axis as the gap towards the wipers is smallest in this position.
In order to ensure that the probe head is completely covered with material, the probe is best positioned near the base. In order to prevent water from accumulating above the sensor head, which could falsify the measurement, an installation angle of approximately 30° above the base centre is recommended.

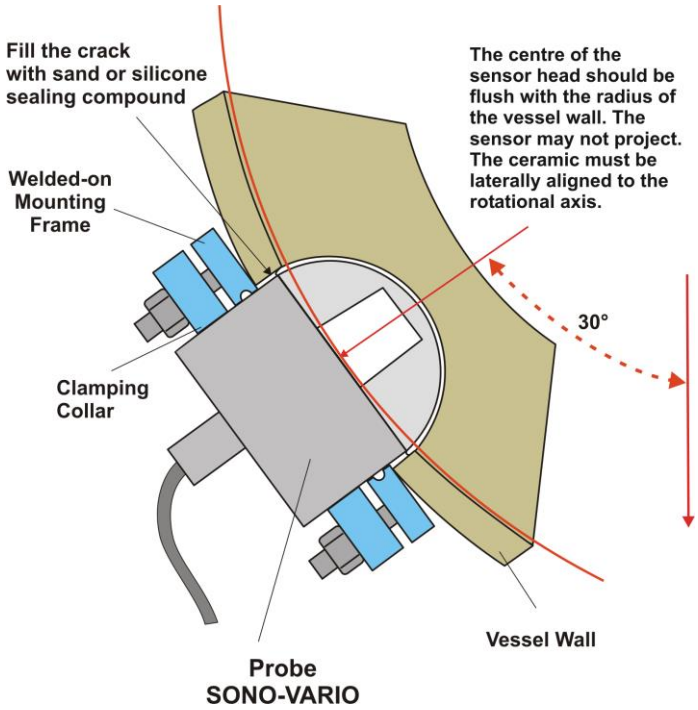

3.4. Funnel shape for higher material depth

If a too quick material flow leads to a too low material height above the probes surface, than a guided funnel shape plate arrangement under a vibration chute could solve the problem. The plates are ideally coated with PTFE for a better adherence behaviour.

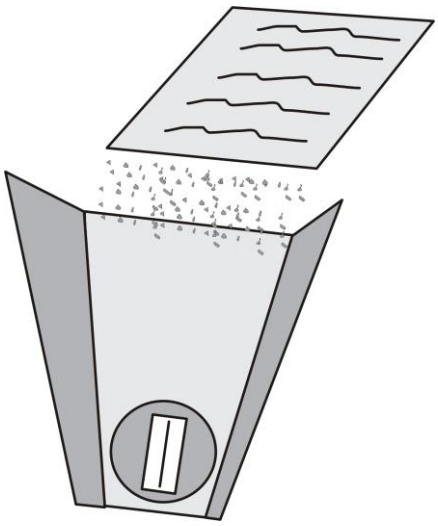

3.5. Gas- and waterproofed Installation

For a pressure-tight installation in a temperature range of -20 ° C to +80 ° C, a flange installation is recommended. The mounting flange can be welded to the container wall. Sealing is possible with a 5.5mm thick O-ring which is fixed with a locking ring.

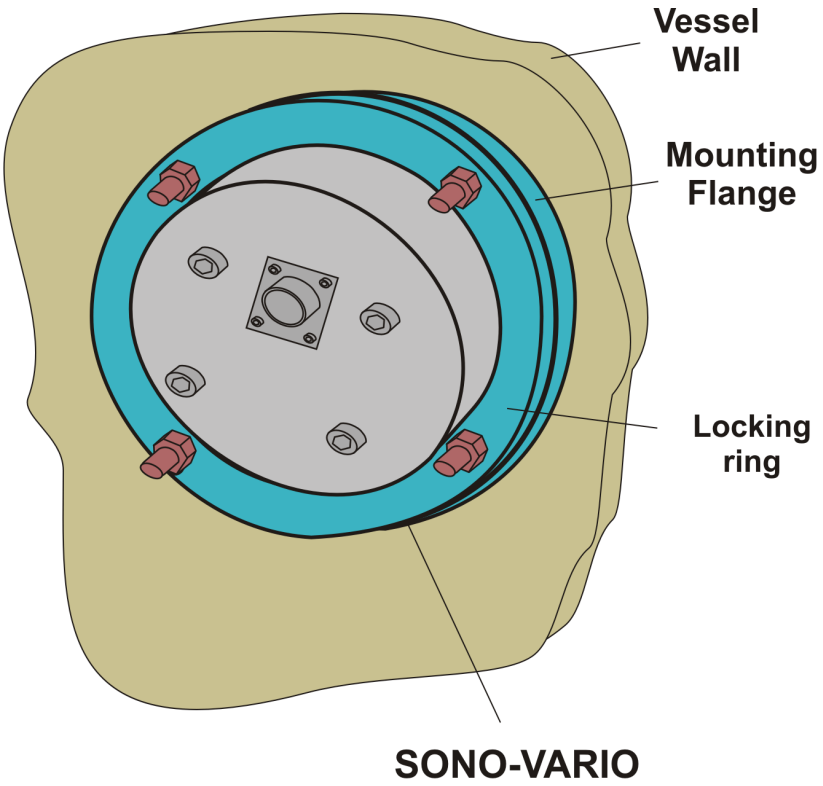

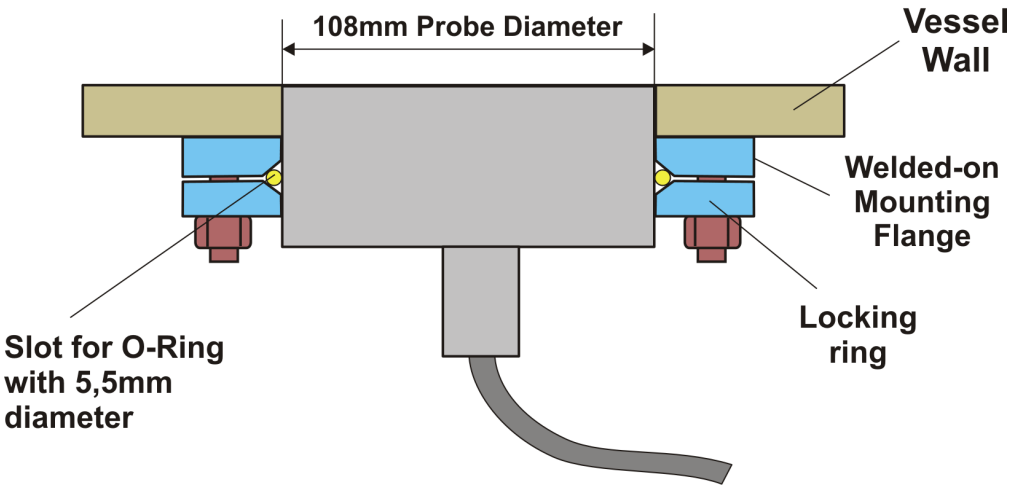

3.6. Installation in a conveyor pipeline

For a pressure-tight installation of the SONO-VARIO in a conveyor pipeline, it is important that the material flow inside the pipe will not be disturbed. This can be realized with a concavely curved flange which is welded on the pipe, in such a way that the radius of the pipe is only disturbed with the flat ceramic plate of the SONO-VARIO with a width of 32mm and a length of 86mm. Depending on the pipe´s diameter, e.g. 150mm, the ceramic plate reaches about 2mm inside the pipe and disturbes the material flow only slightly. A detailed flange construction is further depending on pipe thickness, the proposed maximum pressure and other plant parameters.

The following sketch shows a possible flange construction:

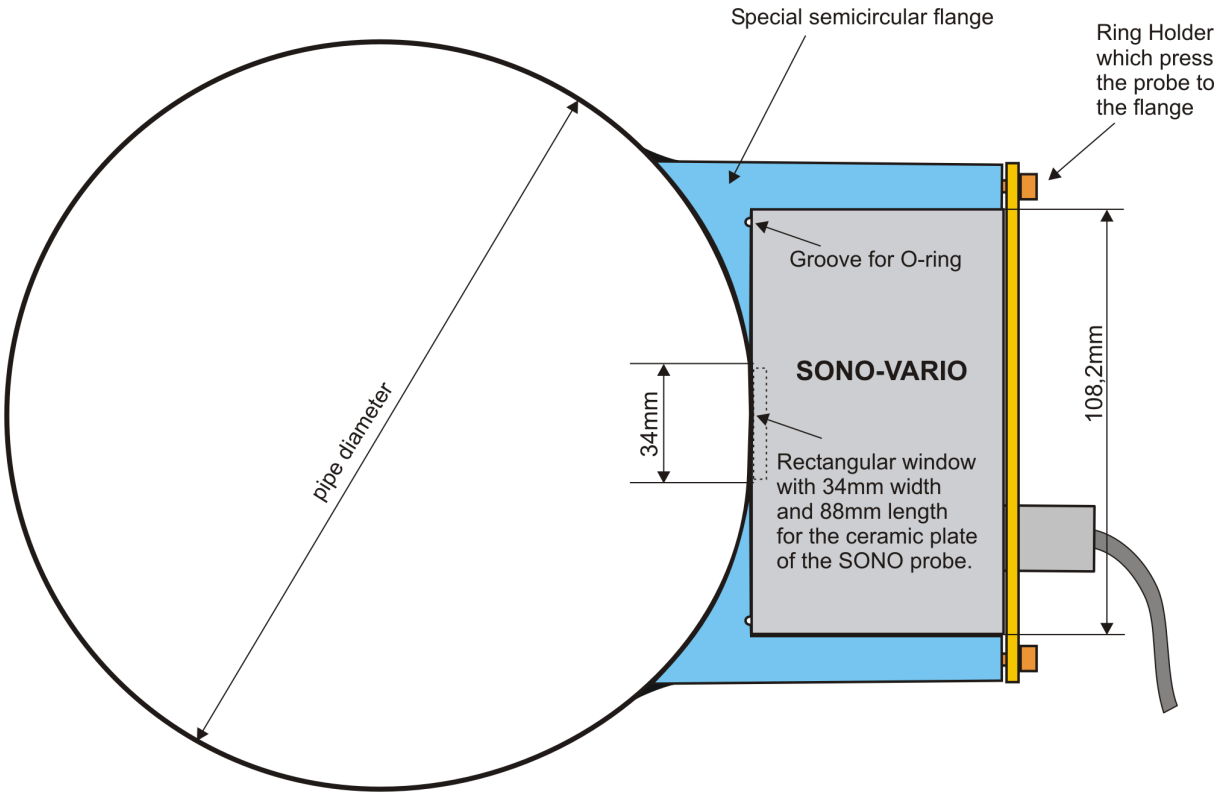

3.7. Exchange of the Probe Head of the VARIOXtrem/LD

At the SONO-VARIOXtrem and VARIOLD not only the ceramic plate but the whole metal/ceramic wear-resistant probe head can be exchanged.

This is how easy it is to exchange the wear-resistant probe head:

- Loosen the 4 fastening screws (look for the right sequence of washer and gasket rings).
- Lift off the probe head carefully so that the robust spring contacts in the interior are canted as little as possible.
- Clean the surface inside the probe body for the O-Ring.
- Place the probe head so that the two spring contacts are inserted in the contact bushings.
- Screw the 4 fastening screws back on. It is to consider, that the 4 screws “find” the 4 holes in the green epoxy plate inside the probe.

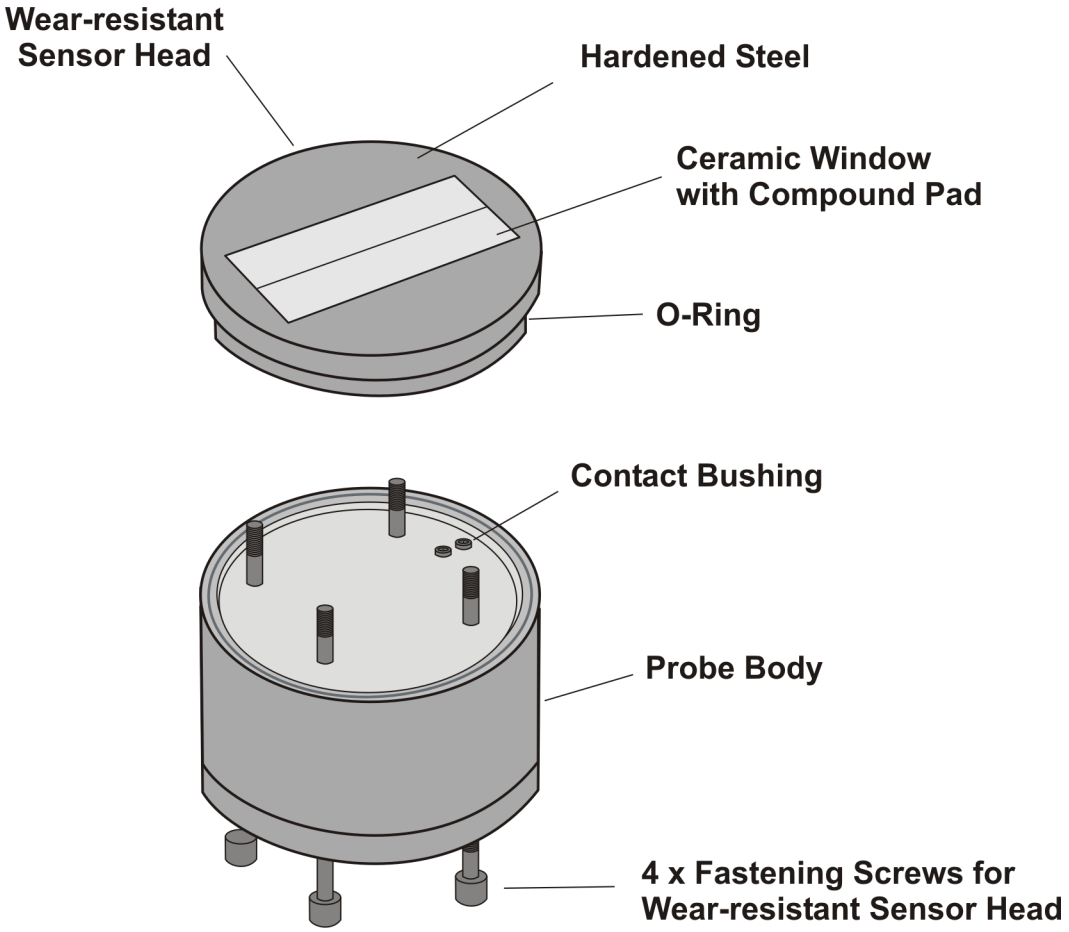

3.7.1. Basic Balancing of a new Probe Head

The probe heads are all identical and are manufactured to fit precisely. In spite of this fact, after an exchange, it is necessary to make a basic calibration in air and water, that SONO-VARIO$_{Xtrem/LD}$ measures precise and accurate with the new probe head. Therefore some work-steps are required.

Basic calibration procedure:

1. Provide a small container with water in which the probe head can be plunged in. For the first calibration point in air the **probe head must be completely dry**. If appropriate dry it with a towel.
2. Unplug the blind cap of the calibration connector and plug in the calibration connector.
3. Plug in the MIL-connector with power supply to the probe. The blue LED is on for 3 seconds and start with a slow blinking for the next 10 seconds preparation time for the first calibration point in air. Therefore the dry probe head must be free in air. When the LED is on continual for 5 seconds the first calibration point is completed in air.
4. Now the blue LED starts with a quicker blinking during 10 seconds preparation time for the second point in water. During this 10 seconds the probe head must be plunged in water. When the LED is on continual for 5 seconds the calibration is completed in water. After that the LED is off.
5. If the calibration should be failed, the blue LED will be blinking continual.
6. Unplug the MIL connector and the calibration connector. Plug in the blind cap of the calibration connector. Plug in the MIL connector again. The blue LED should be active continual now. SONO-VARIO is ready to use. With strong pressing of a hand to the probe head, the analogue moisture output 4..20mA should be respond.

   If necessary the basic balancing procedure could be repeated several times.

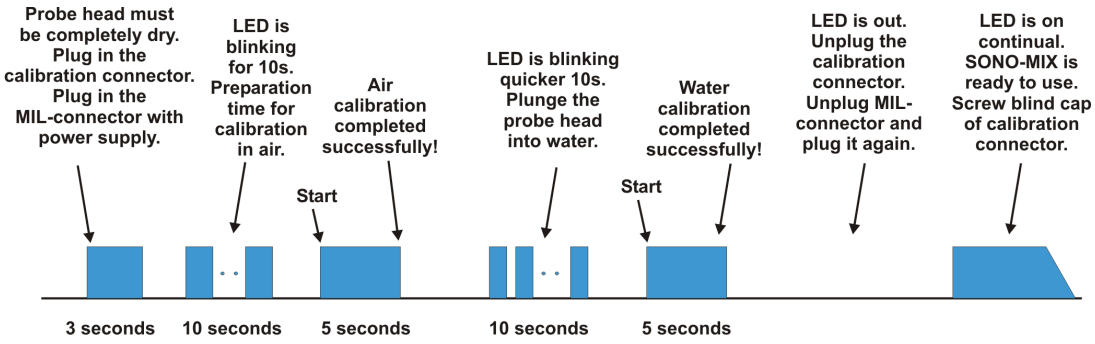

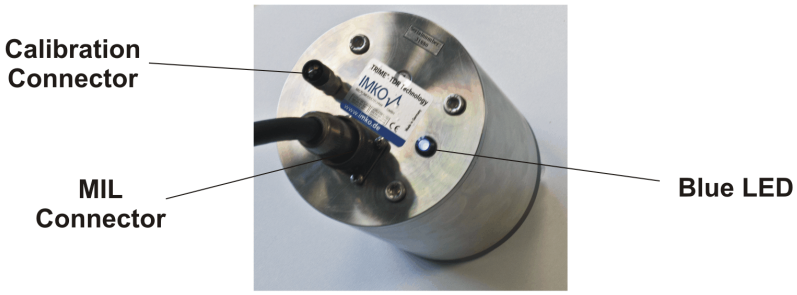

4. Technical Data SONO-VARIO

SENSOR DESIGN

Casing: High Grade Steel V2A 1.4301
SONO-VARIOStandard: The probe head surface consists of stainless steel with abrasion-resistant aluminium oxide ceramic.
SONO-VARIOXtrem: The probe head surface consists of hardened steel with highly abrasion-resistant special ceramic.
SONO-VARIOLD: The probe head surface consists of stainless steel with abrasion-resistant special ceramic.

Available are high-temperature versions of the SONO-VARIO up to 150°C with external measurement transformer SONO-ES upon request!

MOUNTING

Sensor Dimensions:
SONO-VARIOStandard: 108 x 45mm (Diameter x Length)
SONO-VARIOXtrem and LD: 108 x 71mm (Diameter x Length)

The mounting flange can be screwed on to the rear side of any container, hopper or silo.

MEASUREMENT RANGE MOISTURE

The sensor measures from 0% up to the point of material saturation. Measurement ranges up to 100% moisture (pure water) are possible with a special calibration.

MEASUREMENT RANGE CONDUCTIVITY

The sensor, as a material-specific characteristic value, delivers the radar-based conductance (RbC – **R**adar-**b**ased-**C**onductance) in a range of 0…12dS/m. The conductivity range is reduced in moisture measurement ranges >50%.

MEASUREMENT RANGE TEMPERATURE

Measurement Range: 0°C …100°C
The temperature is measured 3mm beneath the wear-resistant sensor head inside the sensor casing and is issued at the analogue output 2. The material temperature can be measured with an external calibration and compensation of the sensor intrinsic-heating.

MEASUREMENT DATA-PREPROCESSING

MEASUREMENT MODE CA: (Cyclic-Average) For relative short measuring processes with continual average value, filtering and an accuracy of up to 0.1%
MEASUREMENT CF: (Cyclic-Float-Average) For very slow measuring processes with floating average value, filtering and an accuracy of up to 0.1%
MEASUREMENT MODE CS: (Cyclic-Successive) For very short measuring processes without floating average with internal up to 100 measurements per second and a cycle time of 200 milliseconds at the analogue output.

SIGNAL OUTPUT

2 x Analogue Outputs 0(4)…20mA
Analogue Output 1: Moisture in % (e.g. 0..20% variably adjustable)
Analogue Output 2: Conductivity (RbC) 0..20dS/m, or optionally the temperature.
In addition, there is the option to split the analogue output 2 into two ranges: into 4..11mA for the temperature and 12..20mA for the conductivity. The analogue output 2 hereby changes over into an adjustable 5 second cycle between these two (current) measurement windows.

The two analogue outputs can be variably aligned with the SONO-CONFIG software. For a 0-10V DC voltage output, a 500R resistor can be installed.

CALIBRATION

The sensor is provided with a universal calibration for sand. A maximum of 15 different calibrations can be stored. For special materials, variable calibrations with polynomials up to the 5th order are possible. A zero point correction can be performed easily with the SONO-CONFIG software.

COMMUNICATION

A RS485 interface enables network operation of the probe, whereby a data bus protocol for the connection of several SONO probes to the RS485 is implemented by default. The connection of the probe to industrial busses such as Profibus, Ethernet, etc. is possible via optional external modules (available upon request).

POWER SUPPLY

+7V to +24V DC, 1.5 W max.

AMBIENT CONDITIONS

0 - 70°C
A higher temperature range is available upon request!

MEASUREMENT FIELD EXPANSION

SONO-VARIOStandard/Xtrem: Approximately 30 - 50 mm, depending on material and moisture.

SONO-VARIOLD: Approximately 70 - 100 mm, depending on material and moisture.

CONNECTOR PLUG

The sensor is equipped with a robust 10-pole MIL flange connector. Ready made connection cables with MIL connectors are available in cable lengths of 4m, 10m, or 25 m.

IMKO MICROMODULTECHNIK GMBH

Precise Moisture Measurement

in hydrology, forestry, agriculture, environmental and earth science, civil engineering, as well as individual applications!